TURBO
WORLDWIDE PROVIDER
DUST FILTERS COMPONENTS
CERTIFIED HEADER TANKS
DIAPHRAGM VALVES
ELECTRONIC SYSTEMS

INDEX

Team 5
Research and development 7
Certificates 8

TURBO HEADER TANKS 10

Technical features 12
Range 13

Header tanks 14
How to order 15

Global immersion header tanks 16
4" Integral series with ½" Dn valves 16
5" Integral series with ¾" Dn valves 17
5" Integral series with 1" Dn valves 18
6" Integral series with ¾" Dn valves 19
6" Integral series with 1" Dn valves 20
6" Integral series with 1½" Dn valves 21
8" Integral series with 1" Dn valves 23
8" Integral series with 1½" Dn valves 24
10" Integral series with 1½" Dn valves 28
10" Integral series with 2" Dn valves 29
10" Integral series with 2½" Dn valves 30
12" Integral series with 2½" Dn valves 31
12" Integral series with 3" Dn valves 32
14" Integral series with 3" Dn valves 34
14" Integral series with 3½" Dn valves 36

Header tanks with threaded stubs - TF Series 38
TF series Dn 5" - 6" - 8" - 10" - 12" - 14" 38

Header tanks with threaded stubs for straight through valves - Series TL 40
TL series Dn 6" - 8" 40

Header tanks with plain stubs - TD Series 42
TD series Dn 5" - 6" - 8" - 10" 42

Stainless steel header tanks 44
XTF series Dn 5" - 6" - 8" - 10" with threaded stubs 44
INX integral series Dn 5" - 6" - 8" - 10" with global immersion 44
Brackets 45

Aluminium global immersion header tanks 46
6" ALUTANK series with 1" Dn valves 46
6" ALUTANK series with 1½" Dn valves 47
8" ALUTANK series with 1" Dn valves 49

Cat_Turbo_2018_Serbatoi_EN.indd 2 16/01/19 12:00

INDEX

8" ALUTANK series with 1½" Dn valves 50
8" ALUTANK series with 2" Dn valves 52

Aluminium header tanks with straight through valves 53
6" ALUTANK series 1” Dn flanged straight through valves 53
8" ALUTANK series 1" - 1 ½" Dn flanged straight through valves 54

Header tanks depacking - Pack Series 56

Air cannons 57

DIAPHRAGM VALVES 58
How to order 60

Valves 61

Diaphragm valves with threaded connectors 62
Valves with threaded connectors - TF series ¾"- 1" - 1 ½" - 2" - 2 ½" 62
Valves with threaded connectors - TF series 1 ½" 64
Valves with threaded connectors - TF series 2" 66
Valves with threaded connectors - TF series 3" 68

Diaphragm valves with quick connectors 70
Valves with threaded connectors - TD series ¾" - 1" - 1 ½" 70

Flanged diaphragm valves 72
Flanged valves - TE series 1" - 1 ½" 72

Diaphragm valves for flat surfaces 76
Valves for flat surfaces - TS series 1" 76
Valves for flat surfaces - TS series 1½" 78
Valves for flat surfaces - TS series 2" - 2 ½" - 3" - 4" 82

Straight through diaphragm valves 84
Straight through diaphragm valves - TL series 1" 84
Straight through diaphragm valves - TL series 1½" 86

Flanged straight through diaphragm valves 88
Flanged straight through diaphragm valves - TM series 1" 88
Flanged straight through diaphragm valves - TM series 1½" 90

Connectors and mounting keys 93
Bulkhead quick connectors - PS/PD series ¾" - 1" - 1 ½" - 2" 94

Remote pilot enclosure 96
How to order 97
Remote pilot enclosure - RCP series 98

Cat_Turbo_2018_Serbatoi_EN.indd 3 16/01/19 12:00

INDEX

Remote pilot enclosure - RLD series 99
Remote pilot enclosure - REP series 100

Remote pilot 102
How to order 102
Remote pilot for diaphragm valves - SR series 103
Remote pilot for diaphragm valves - LD series 105
Remote pilot for diaphragm valves - ESRM series 107

ATEX - solenoid valves with ATEX certification 108
ATEX - The 2014/34/EU ATEX Directive 109

ELECTRONIC SYSTEMS 112
How to order 114

Electronic systems 115
E1T control unit sequencer 4÷16 output channels 116
E1T control unit sequencer 20÷99 output channels 117
E2T control unit economiser 4÷16 output channels 118
E2T control unit economiser 20÷99 output channels 119
EAT control unit economiser 4÷16 output channels 120
E3T Digital differential pressure switch 121
E5T control unit sequencer 20÷184 output channels 122
E6T control unit economiser 20÷184 output channels 123
E7T control unit sequencer 4÷16 output channels 124
E8T control unit economiser 4÷16 output channels 125
Modbus rtu master + slave serial system - electric 126
Modbus rtu master + slave serial system - pneumatic 127
ECONET 128 solenoid valves control unit economiser 128
ECONET PLUS EC+PLS 128 solenoid valves control unit economiser 129
ECONET PLUS EC++LS 128 solenoid valves control unit economiser 130
Computer with LCD monitor, Wi-Fi - BEGA 131
PC PANEL for remote management of the ECONET PLUS and tribo units 132
ECONET connector with built-in activation board 133
ERCP - remote pilot enclosure for ECONET system 134
E4T built-in sequencer in RCP enclosure 135
e9trb tribo sensor with charge displacement 136
E9T control unit for tribo sensor 137
4401002 024 vac vdc - 4401004 115 230 vac timed connector 138
Matrix electrical system 139

ACCESSORIES 140

Cat_Turbo_2018_Serbatoi_EN.indd 4 16/01/19 12:00

Turbo was established in 1998 as the result of its founders' extensive experience in the environmentally-friendly design and manufacture of dust filters.

We have a wide range of diaphragm valves; PED 2014/68/EU and ASME VIII div.1 U and Um Stamp certified header tanks; control electronics; multi-connection and serial electric cabling; several accessories such as bulkheads and air cannons.

Cat_Turbo_2018_Serbatoi_EN.indd 5 16/01/19 12:00

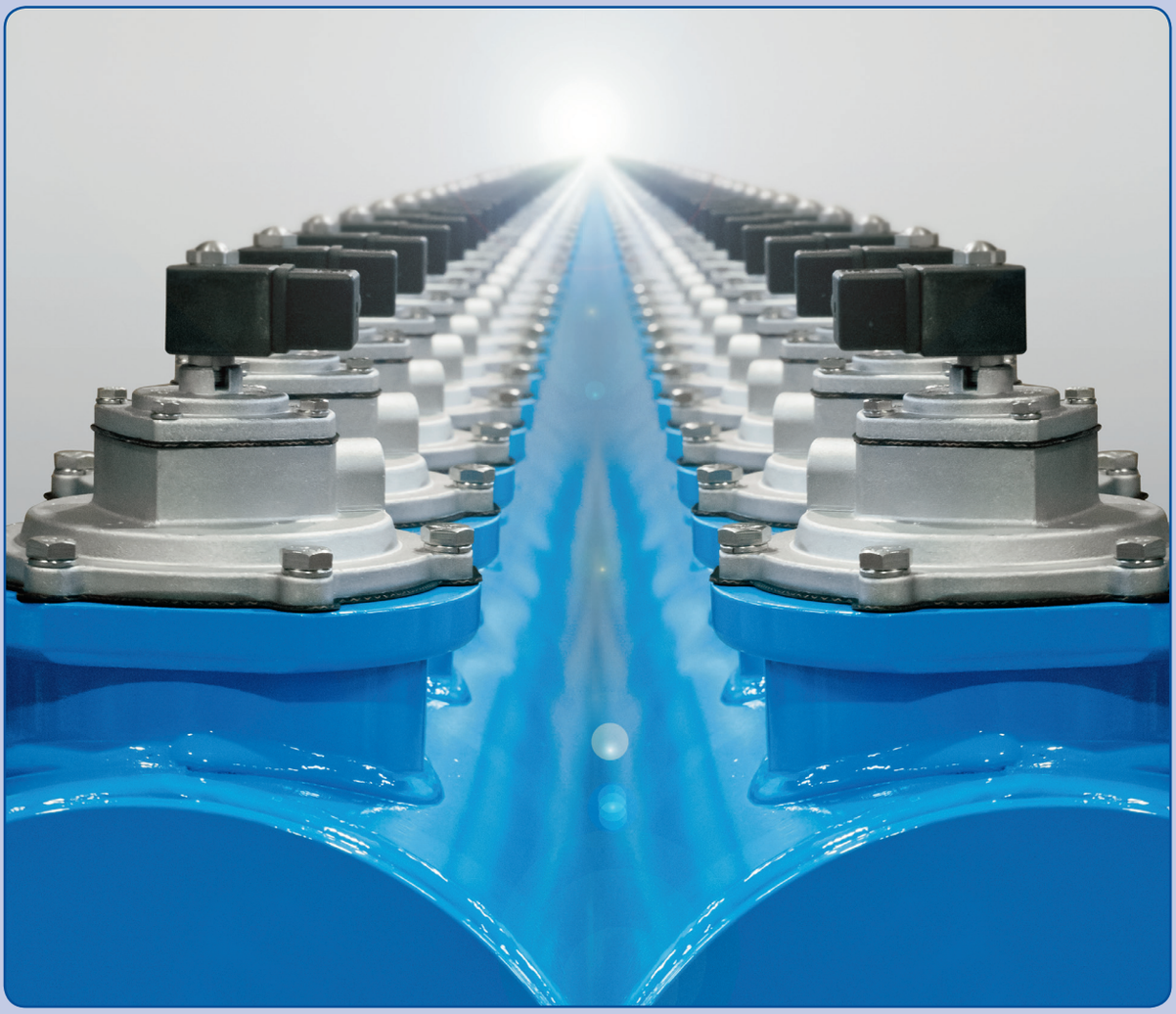

Our technical dept. carries out construction drawings on specific customer request, the highly automated production guarantees flexibility and respect of deliveries requested by customers, all our products are 100% tested and are Made in Italy.

Our company policy is aimed completely at Customer Satisfaction. Since its establishment, Turbo Srl has chosen to share and implement the principles of "Total Quality" and continuous improvement envisioned by the ISO 9001: 2015 Standard.

TURBO™

via Po, 33 - 20811 CESANO MADERNO - MB (ITALY)
phone ++39 0362 574024 - fax ++39 0362 574092 - info@turbocontrols.it - www.turbocontrols.it

www.turbocontrols.eu

RESEARCH AND DEVELOPMENT

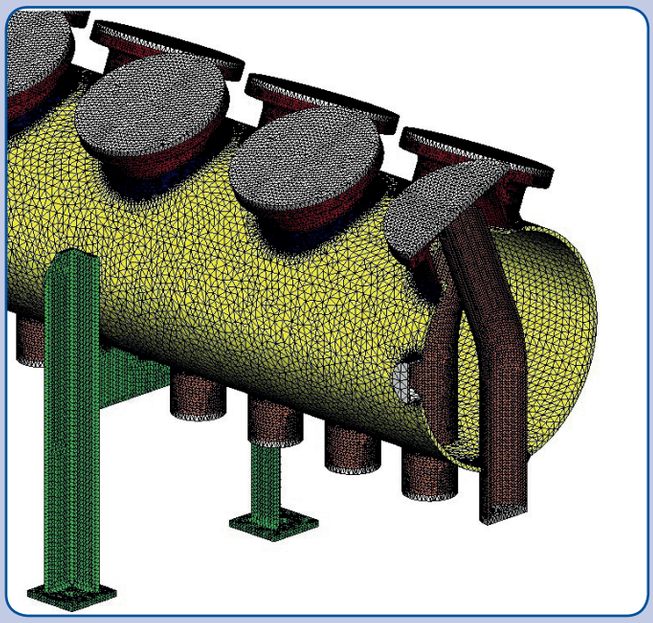

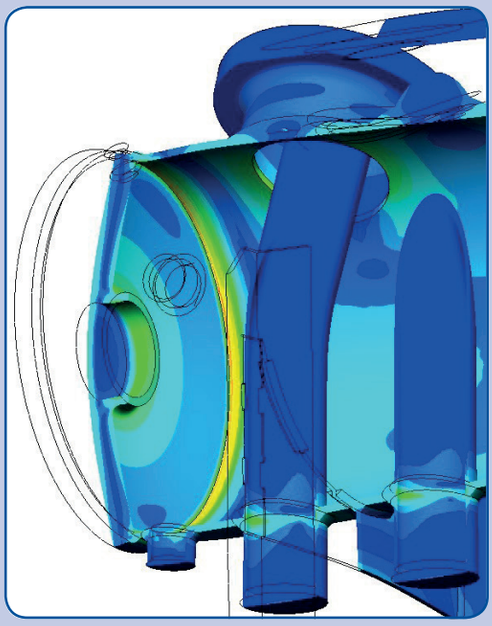

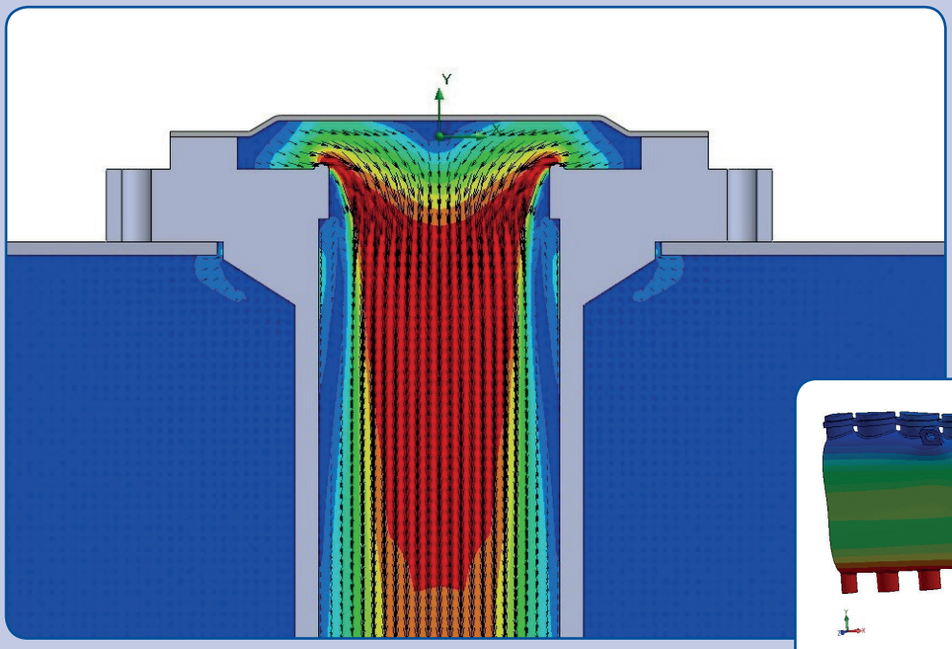

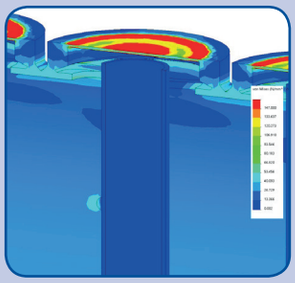

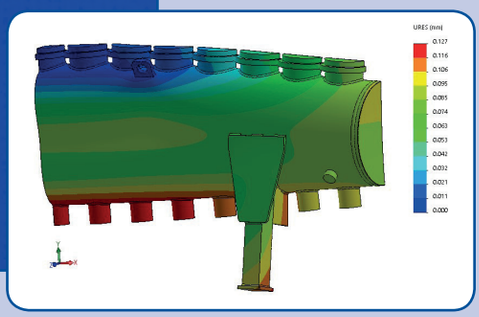

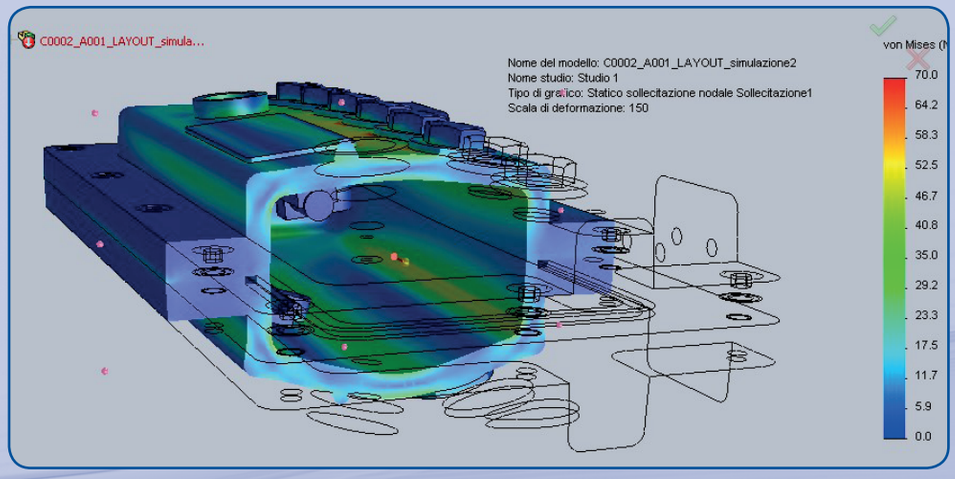

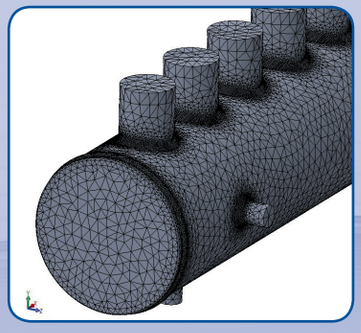

Cat_Turbo_2018_Serbatoi_EN.indd 7 16/01/19 12:00

CERTIFICATE

MS CERT

Certificato di Conformità

del SISTEMA di GESTIONE della QUALITÀ

Si certifica che il Sistema di Gestione per la Qualità di

TURBO S.R.L.

Indirizzo: Via Po, 33/35 – 20811 – Cesano Maderno (MB)

è conforme alla norma e allo scopo sotto riportati

ISO 9001:2015

Scopo:

Progettazione, produzione e commercializzazione di componenti per filtri depolveratori.

ANZSIC CODE: 2499

CERTIFICAZIONE N °: ITA/QMS/00191

Emissione n: 01

Data Delibera: 04.09.2017 Valido fino a: 03.09.2020

Revisione n: 01 Data revisione: 05.07.2018

Data Certificazione originale: 23.07.2004

June 2018

Responsabile della Certificazione

June 2019

Sorveglianza Audit 1° anno

Sorveglianza Audit 2° anno

MS CERT

JAS-ANZ

ACC.No.M4151008IK

MEMBER OF MULTILATERAL RECOGNITION ARRANGEMENT IAF

MSCS Critical Location: **MS CERTIFICATION SERVICES PVT. LTD.,** 3/23 R.K.CHATTERJEE ROAD KOLKATA-700042, INDIA.

Local Office (Other Location): **MS CERTIFICATION EUROPE S.R.L.,** VIALE FERRUCCI 10 – 28100, NOVARA (NO), ITALY.

☎: +39 0321 3961 - email: management.msce@gmail.com

www.mscertification.net

The validity of this certificate can be verified at www.jas-anz.org/register and www.mscertification.net

The Certificate is valid only if the annual surveillance mark is signed by auditor on original.

F60.rev.05

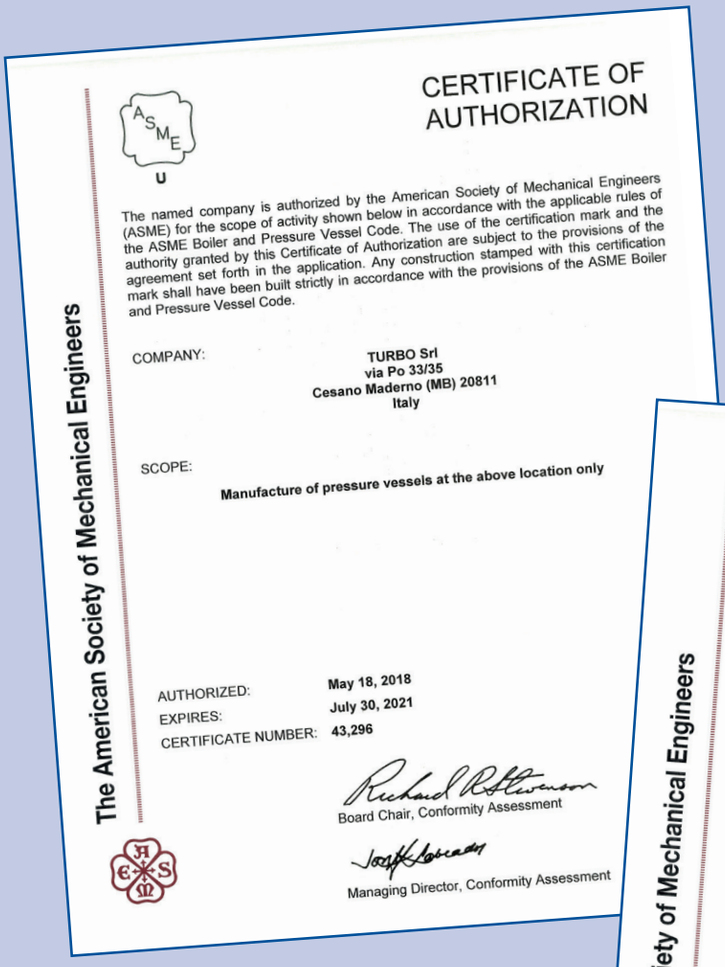

The American Society of Mechanical Engineers

U

CERTIFICATE OF AUTHORIZATION

The named company is authorized by the American Society of Mechanical Engineers (ASME) for the scope of activity shown below in accordance with the applicable rules of the ASME Boiler and Pressure Vessel Code. The use of the certification mark and the authority granted by this Certificate of Authorization are subject to the provisions of the agreement set forth in the application. Any construction stamped with this certification mark shall have been built strictly in accordance with the provisions of the ASME Boiler and Pressure Vessel Code.

COMPANY:

TURBO Srl
via Po 33/35
Cesano Maderno (MB) 20811
Italy

SCOPE:

Manufacture of pressure vessels at the above location only

AUTHORIZED: **May 18, 2018**
EXPIRES: **July 30, 2021**
CERTIFICATE NUMBER: **43,296**

Board Chair, Conformity Assessment

Managing Director, Conformity Assessment

The American Society of Mechanical Engineers

UM

CERTIFICATE OF AUTHORIZATION

The named company is authorized by the American Society of Mechanical Engineers (ASME) for the scope of activity shown below in accordance with the applicable rules of the ASME Boiler and Pressure Vessel Code. The use of the certification mark and the authority granted by this Certificate of Authorization are subject to the provisions of the agreement set forth in the application. Any construction stamped with this certification mark shall have been built strictly in accordance with the provisions of the ASME Boiler and Pressure Vessel Code.

COMPANY:

TURBO Srl
via Po 33/35
Cesano Maderno (MB) 20811
Italy

SCOPE:

Manufacture of miniature pressure vessels at the above location only

AUTHORIZED: **May 18, 2018**
EXPIRES: **July 30, 2019**
CERTIFICATE NUMBER: **43,297**

Board Chair, Conformity Assessment

Managing Director, Conformity Assessment

TURBO HEADER TANKS

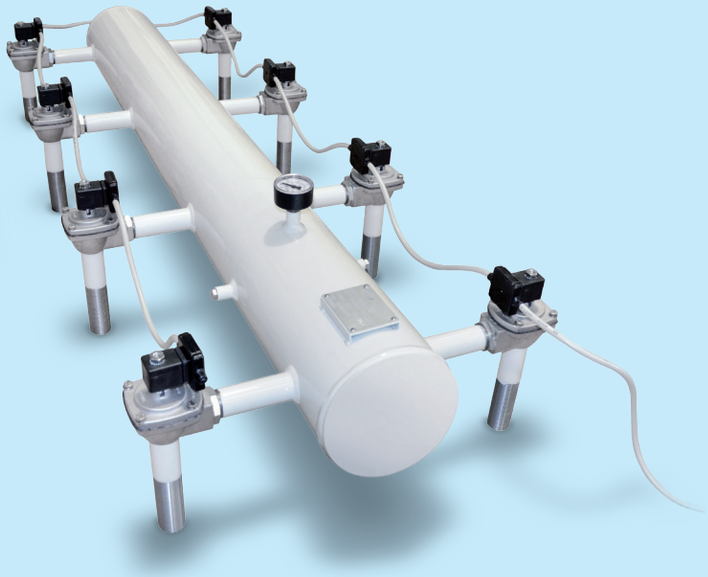

CERTIFIED HEADER TANKS

Turbo boasts a full range of dust collector header tanks compliant with the PED 2014/68/EU Directives. Our header tanks stand out for their high performance and durability.

Our expertise and product customisation allow us to meet the requirements of dust collector system and machine manufacturers.

Turbo mainly makes three types of header tanks:

1. Steel header tanks
(Integral, TF, TL, TD, and Pack series)

2. Aluminium header tanks
(Alutank series)

3. AISI 304 and 316 stainless steel header tanks
(Integral, TF, TL, TD, and Pack series)

Cat_Turbo_2018_Serbatoi_EN.indd 10 16/01/19 12:00

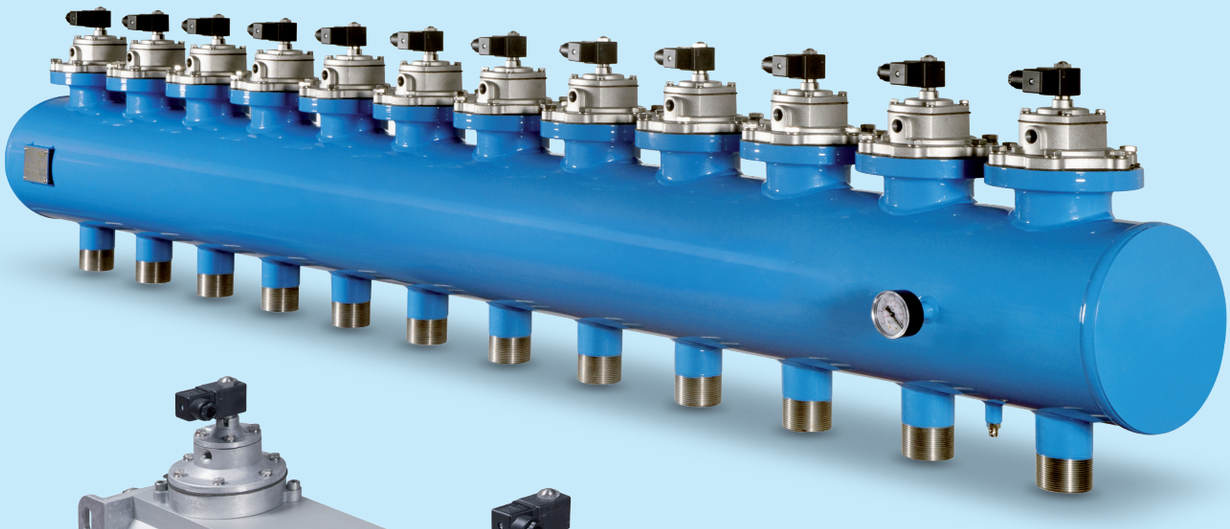

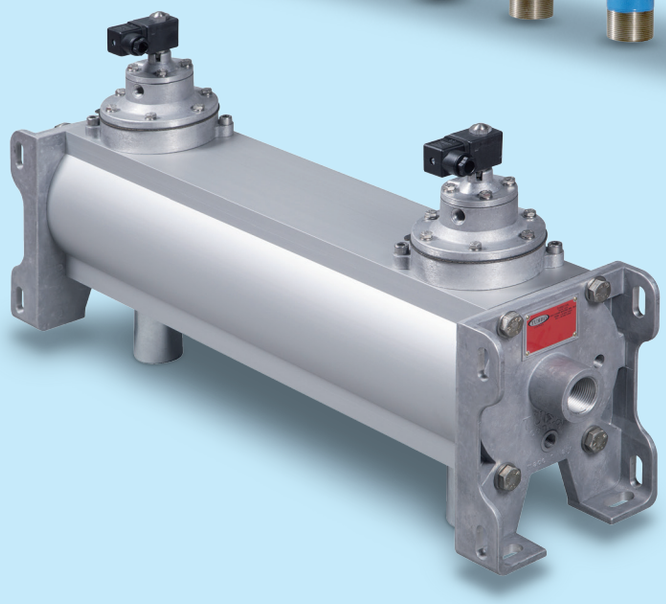

We have a wide range of accessories available, among which air cannons, bulkhead connectors, Matrix cabling system, and Eco-Net bus serial cabling system.

Turbo also provides header tanks manufactured in compliance with the ATEX 2014/34/EC Directive compliant with the following marking:

ATEX II 2GD (zone 1 and 21)
ATEX II 3GD(zone 2 and 22).

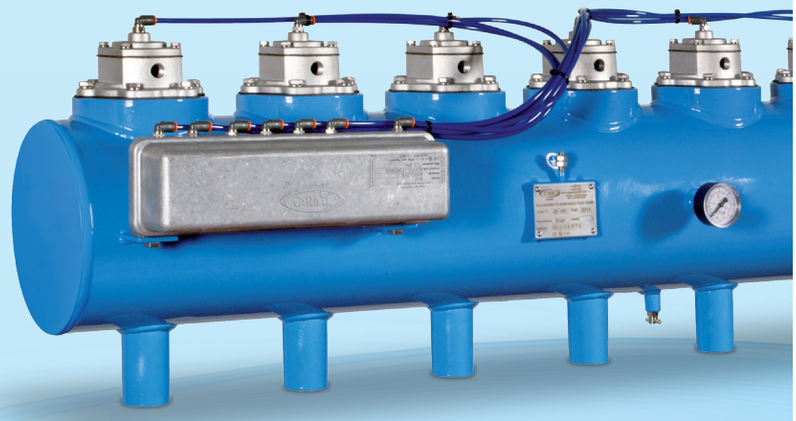

(The ATEX directive is illustrated at page 109/110)

Cat_Turbo_2018_Serbatoi_EN.indd 11 16/01/19 12:00

TECHNICAL FEATURES

COIL		
Coil insulation	Class H	
Connector	PG 9 EN 175301-803	
Connector + coil protection	IP 65 EN 60529	
the 2014/34 EU Atex Directive	Group II Cat. 2GD + Group II Cat. 3GD	
Voltage		
24V / 50-60 Hz (± 10%) 19VA		
115V / 50-60 Hz (± 10%) 19VA		
230V / 50-60 Hz (± 10%) 19VA		
24 DC (± 10%) 18 Watt		
VALVE CONSTRUCTION		
Cover	Die-cast aluminium	
Valve body	Die-cast aluminium	
Pilot unit	Stainless Steel	
Screws	Stainless Steel	
Std diaphragm	-20 °C + 80 °C	
Viton diaphragm	-20 °C + 200°C	
Low temperature diaphragm	Elastomer textile -40°C; + 80°C	
Diaphragm disk	Stainless Steel	
TANK OPERATION		
Fluids	Compressed air - nitrogen	
Operating pressure	between 0.5 and 8 bar	
Carbon steel operating temperature	-20 °C + 80 °C	
Carbon steel low operating temperature	-40°C + 80 °C	
Stainless steel operating temperature	-50°C + 200°C	
the 2014/34 EU Atex Directive	Group II Cat. 2 GD	
	Group II Cat. 3 GD	
TANK CAPACITY		
Dn 4” (114 mm)	8.9	litres/metre
Dn 5” (141.3 mm)	13.6	litres/metre
Dn 6” (168 mm)	19.8	litres/metre
Dn 8” (219 mm)	33.4	litres/metre
Dn 10” (273 mm)	53.2	litres/metre
Dn 12” (324 mm)	76	litres/metre
Dn 14” (356 mm)	91	litres/metre

Cat_Turbo_2018_Serbatoi_EN.indd 12 16/01/19 12:00

RANGE

La range of TURBO header tanks

- **Global immersion**
  In global immersion header tanks, the diaphragm valve is fully immersed in the fluid.
  This feature ensures a particularly high yield.
- **With threaded stubs**
  These ensure a perfectly rigid valve assembly and alignment.
  The valves used for these header tanks have threaded connections.
- **With plain stubs**
  This solution allows for extremely quick and efficient valve assembly.
- **Alutank aluminium header tanks**
  These lightweight header tanks are fully made according to customer requirements and are particularly easy to handle. The anodised aluminium provides particular resistance against weather agents whilst preventing oxidation. It also ensures clean compressed air supply.

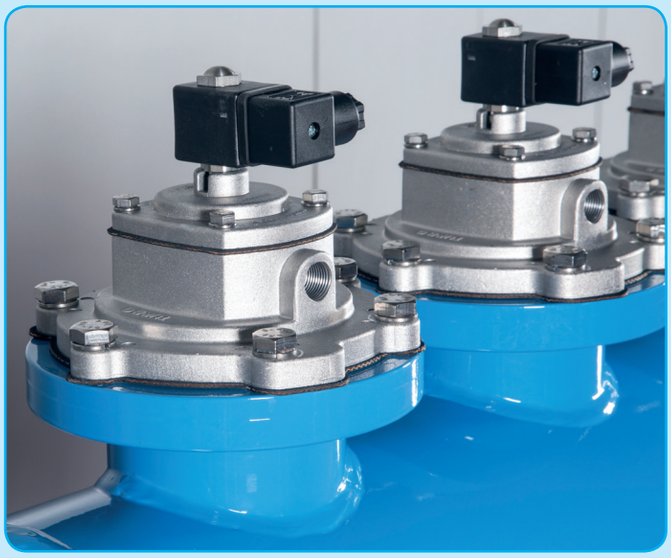

Cat_Turbo_2018_Serbatoi_EN.indd 13 16/01/19 12:01

HEADER TANKS

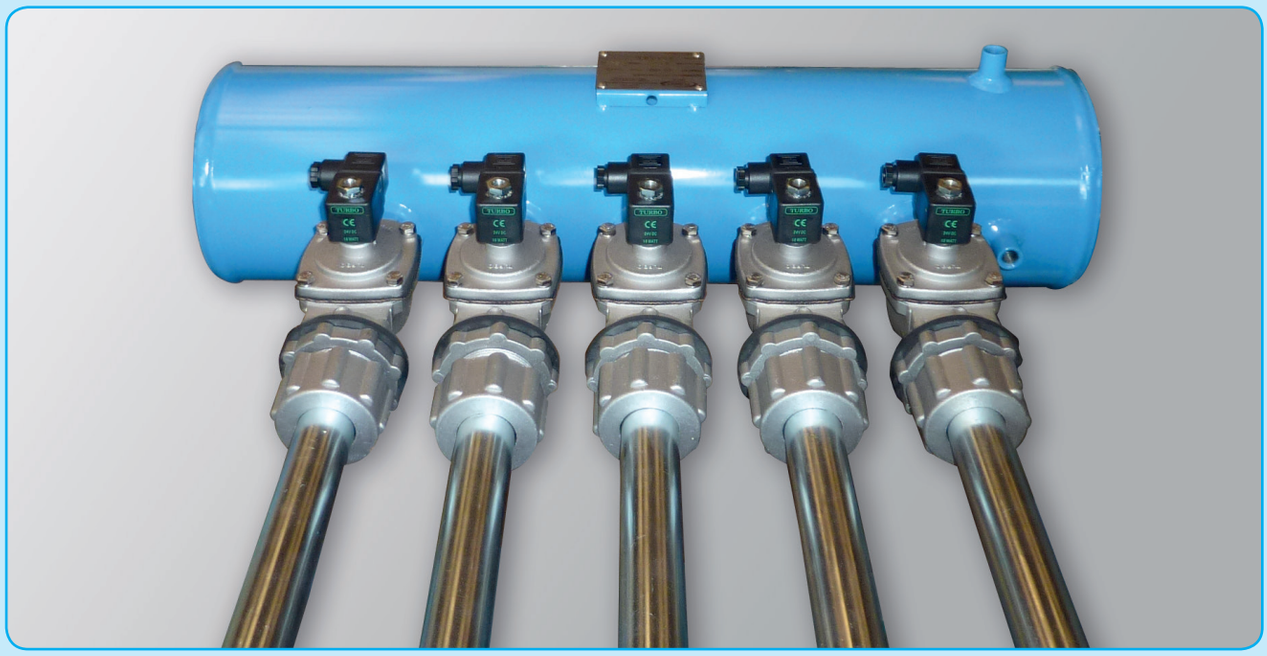

GLOBAL IMMERSION HEADER TANKS	INTEGRAL series	PED 2014/68/EU
HEADER TANKS WITH THREADED STUBS	TF series	PED 2014/68/EU
HEADER TANKS WITH THREADED STUBS FOR STRAIGHT THROUGH VALVES	TL series	PED 2014/68/EU
HEADER TANKS WITH PLAIN STUBS	TD series	PED 2014/68/EU
STAINLESS STEEL HEADER TANKS	XTF - INX series	PED 2014/68/EU
GLOBAL IMMERSION HEADER TANKS	ALUTANK series	PED 2014/68/EU
DEPACKING HEADER TANKS	PACK series	PED 2014/68/EU

CERTIFICATES COMPLIANT WITH THE 2014/68/EU - PED DIRECTIVES

Cat_Turbo_2018_Serbatoi_EN.indd 14 16/01/19 12:01

HOW TO ORDER

example INTEGRAL 6 P 25 02450 N10 P150 F G1

HEADER TANK MODEL

GLOBAL IMMERSION =	INTEGRAL
WITH THREADED STUBS =	TF - TL
WITH PLAIN STUBS =	TD
ALUMINIUM =	ALUTANK

TANK DIAMETER

4” =	4
5” =	5
6” =	6
8” =	8
10” =	10
12” =	12
14” =	14

BUILT-IN PILOT =	P
REMOTE PILOT =	M

VALVE DIAMETER

1/2” =	10
3/4” =	20
1” =	25
1 ½" =	30
1 ½" =	35
1 ½" =	40
1 ½" =	45
2” =	50
2” =	54
2” =	55
2 ½" =	65
2 ½" =	71
3” =	75
3” =	80
3 ½" =	100

COIL VOLTAGE

24V/50-60Hz =	02450
115V/50-60Hz =	11050
230V/50-60Hz =	22050
24VDC =	024DC

N =	NUMBER OF VALVES

P =	PITCH

FLAT ENDS =	F

ONLY FOR INTEGRAL - ALUTANK series

SHORT PLAIN OUTLET PIPE =	G1
LONG PLAIN OUTLET PIPE =	G2
LONG THREADED OUTLET PIPE =	G3
SHORT THREADED OUTLET PIPE =	G4

The code, INTEGRAL 6P2502450N10P150FG1 represents a global immersion header tank of the Integral series, which has a 6’’ diameter (6), electric pilots installed (P), 10 (N10) x 1’’ valves (25) powered by a 24V 50Hz voltage (02450) and having a 150 mm pitch (P150). The bottoms are flat (F) and the outlet pipes are short and plain (G1).

4" INTEGRAL SERIES WITH ½" DN VALVES

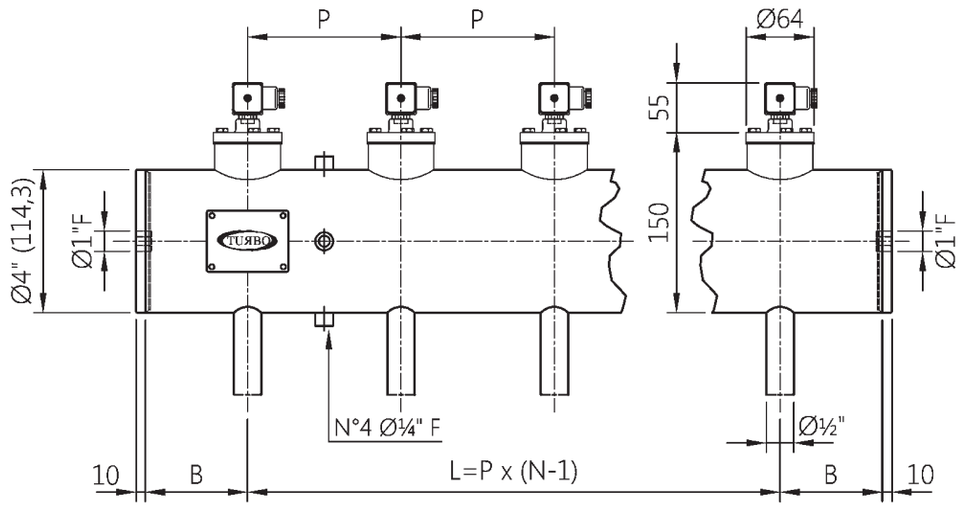

P min = 102 / B min = 55

For special versions of P min and B min, please contact our technical department

DESCRIPTION		TI010(N-V-T)P / TI010(N-V-T)M
1	Coil - Connector	BH10 V## / V##
2	Screws - Washers	TKITVTE06X18X4
3	Pilot unit	1331080
4	Pilot cover	1251720
5	Remote cover	1251740
6	Diaphragm spring	3241006
7	Diaphragm (N-V-T)	TKISM010N Neoprene TKISM010V Viton TKISM010T Low temperature

V## / V## = 24 Vdc - 24 Vac - 115 Vac - 230 Vac

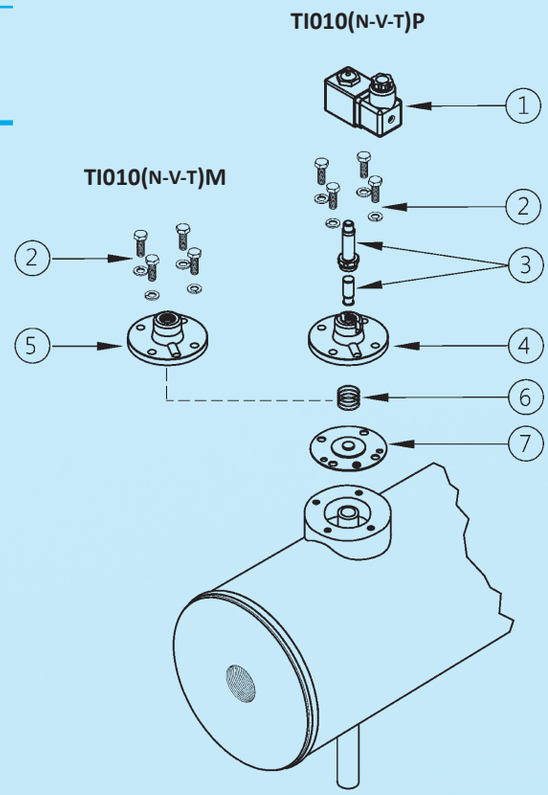

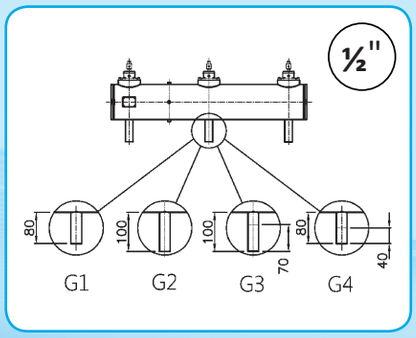

SHORT PLAIN OUTLET PIPE = G1
LONG PLAIN OUTLET PIPE = G2
LONG THREADED OUTLET PIPE = G3
SHORT THREADED OUTLET PIPE = G4

Cat_Turbo_2018_Serbatoi_EN.indd 16 16/01/19 12:01

5" INTEGRAL SERIES WITH ¾" DN VALVES

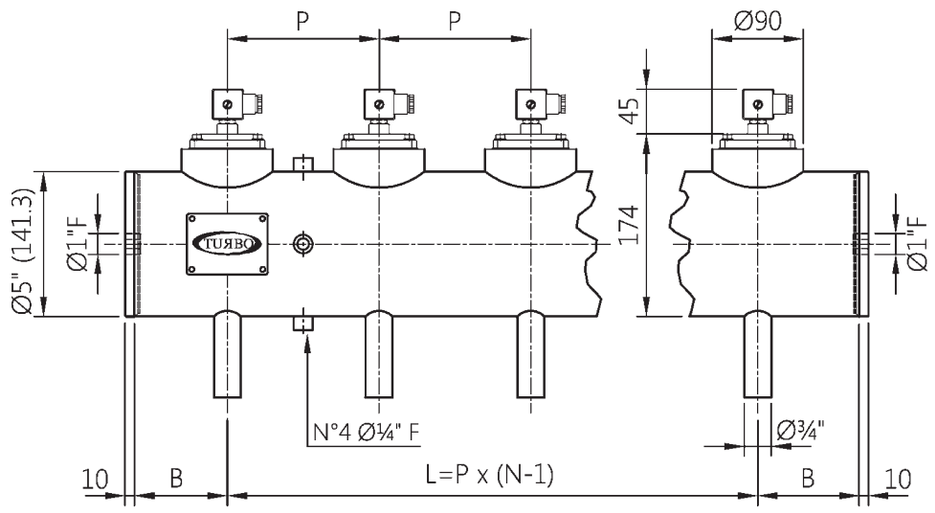

P min = 120 / B min = 90

For special versions of P min and B min, please contact our technical department

DESCRIPTION		TI020(N-V-T)P / TI020(N-V-T)M
1	Coil - Connector	BH10 V## / V##
2	Screws - Washers	TKITVTE06X18X4
3	Pilot unit	1331080
4	Pilot cover	1251750
5	Remote cover	1251770
6a	Diaphragm spring	3241002
6	Diaphragm (N-V-T)	TKISM025N Neoprene TKISM025V Viton TKISM025T Low temperature

V## / V## = 24 Vdc - 24 Vac - 115 Vac - 230 Vac

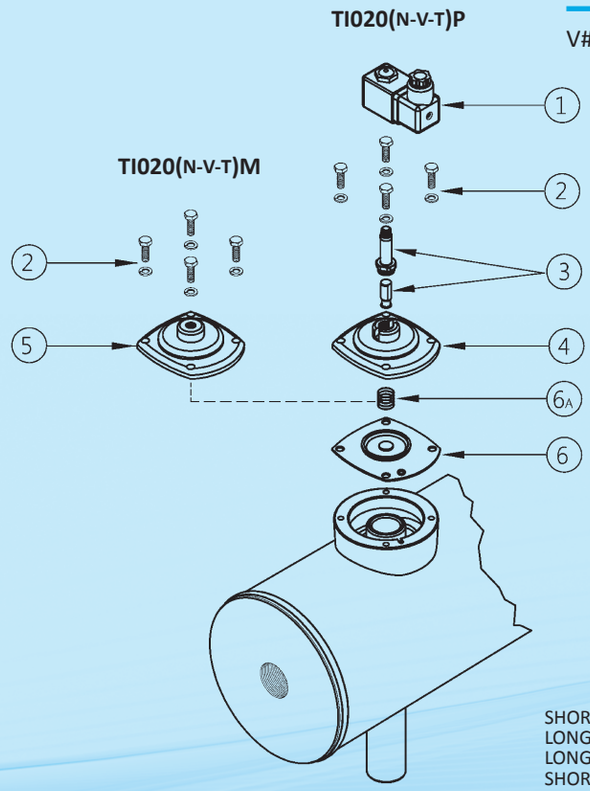

BRACKETS

CS = COLLAR
SA = HIGH SUPPORT A = 180
SM= MEDIUM SUPPORT A = 160
SB = LOW SUPPORT A = 95

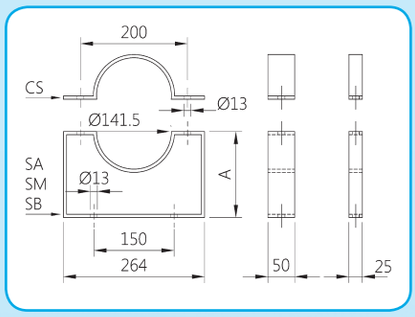

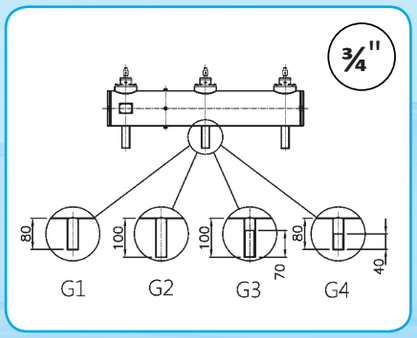

SHORT PLAIN OUTLET PIPE = G1
LONG PLAIN OUTLET PIPE = G2
LONG THREADED OUTLET PIPE = G3
SHORT THREADED OUTLET PIPE = G4

5" INTEGRAL SERIES WITH 1" DN VALVES

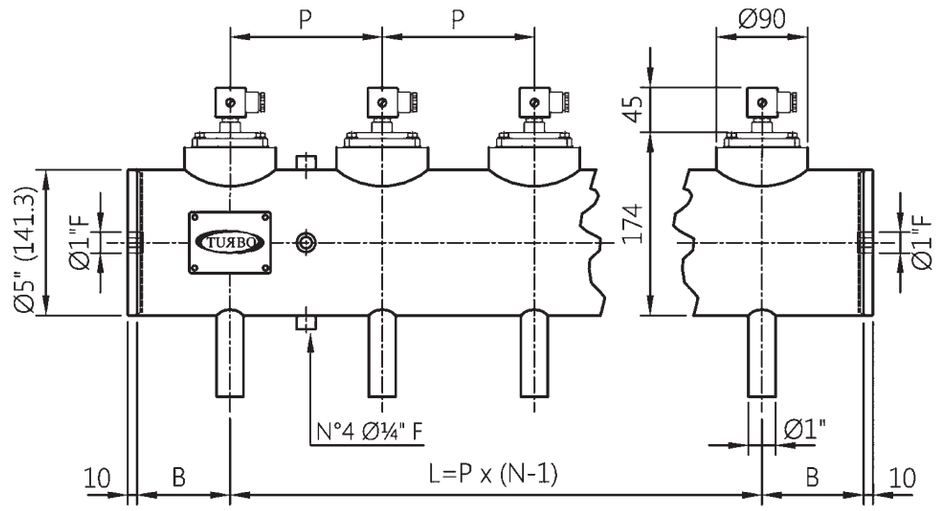

P min = 120 / B min = 90

For special versions of P min and B min, please contact our technical department

DESCRIPTION		TI025(N-V-T)P / TI025(N-V-T)M
1	Coil - Connector	BH10 V## / V##
2	Screws - Washers	TKITVTE06X18X4
3	Pilot unit	1331080
4	Pilot cover	1251750
5	Remote cover	1251770
6a	Diaphragm spring	3241002
6	Diaphragm (N-V-T)	TKISM025N Neoprene TKISM025V Viton TKISM025T Low temperature

V## / V## = 24 Vdc - 24 Vac - 115 Vac - 230 Vac

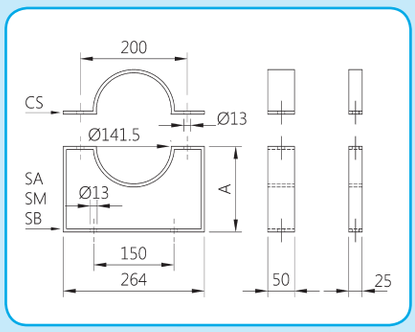

BRACKETS

CS = COLLAR
SA = HIGH SUPPORT A = 180
SM= MEDIUM SUPPORT A = 160
SB = LOW SUPPORT A = 95

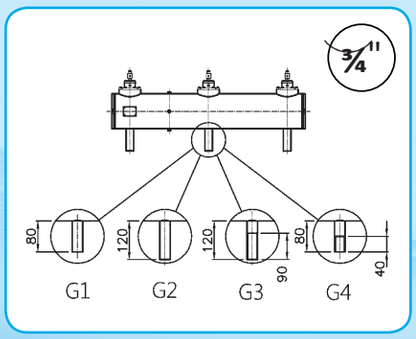

SHORT PLAIN OUTLET PIPE = G1
LONG PLAIN OUTLET PIPE = G2
LONG THREADED OUTLET PIPE = G3
SHORT THREADED OUTLET PIPE = G4

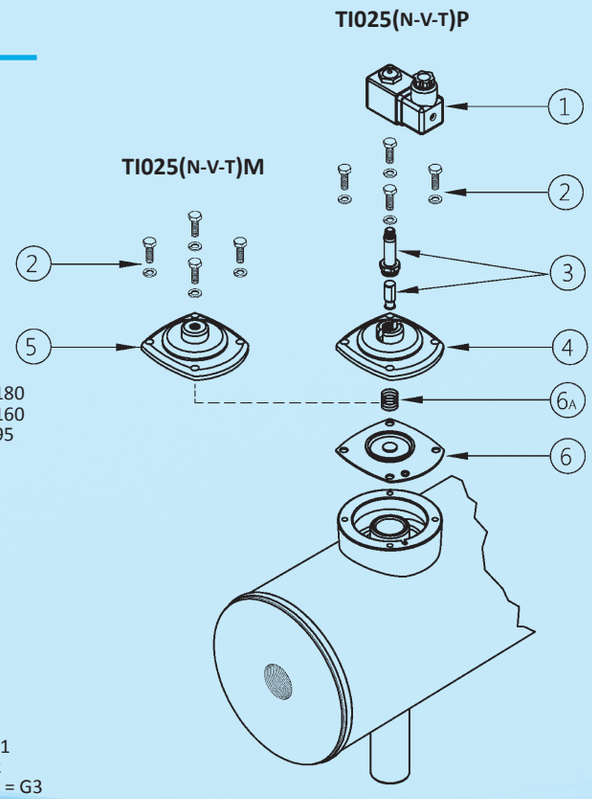

Cat_Turbo_2018_Serbatoi_EN.indd 18 16/01/19 12:01

6" INTEGRAL SERIES WITH ¾" DN VALVES

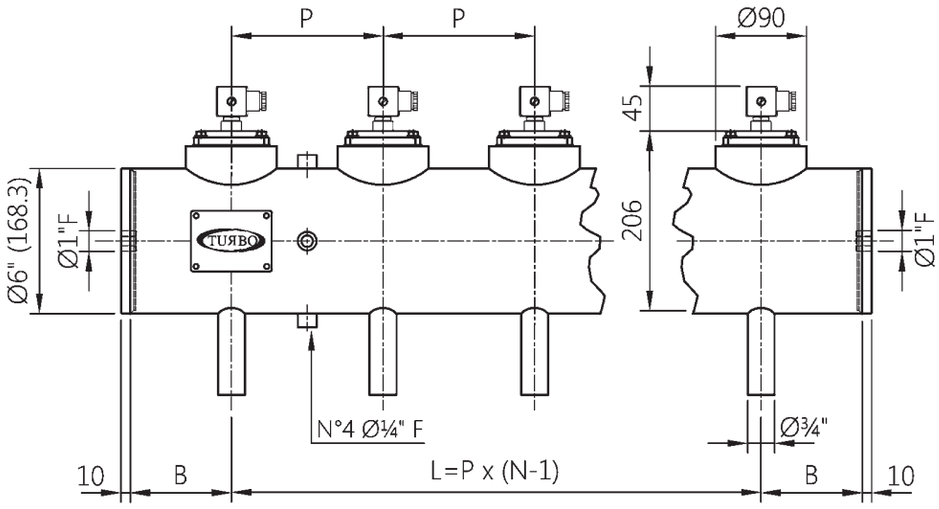

P min = 120 / B min = 90

For special versions of P min and B min, please contact our technical department

DESCRIPTION		TI020(N-V-T)P / TI020(N-V-T)M
1	Coil - Connector	BH10 V## / V##
2	Screws - Washers	TKITVTE06X18X4
3	Pilot unit	1331080
4	Pilot cover	1251750
5	Remote cover	1251770
6a	Diaphragm spring	3241002
6	Diaphragm (N-V-T)	TKISM025N Neoprene TKISM025V Viton TKISM025T Low temperature

V## / V## = 24 Vdc - 24 Vac - 115 Vac - 230 Vac

TI020(N-V-T)P

TI020(N-V-T)M

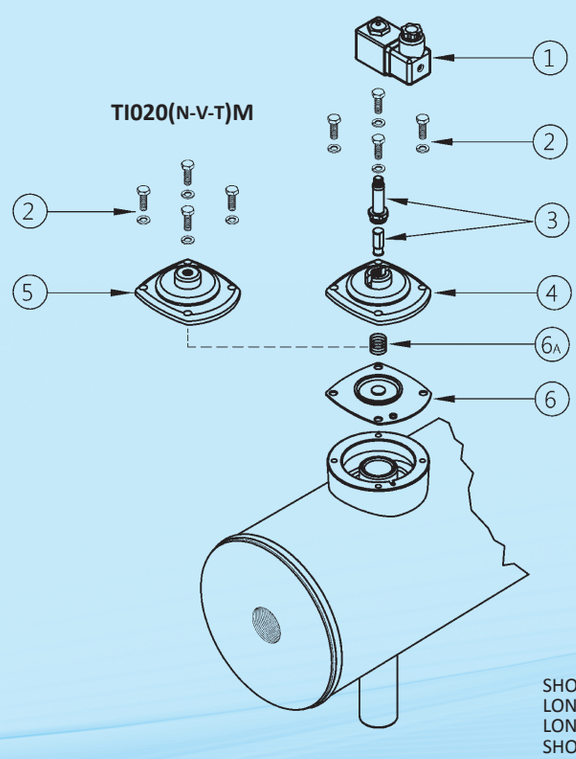

BRACKETS

CS = COLLAR
SA = HIGH SUPPORT A = 200
SM= MEDIUM SUPPORT A = 170
SB = LOW SUPPORT A = 109

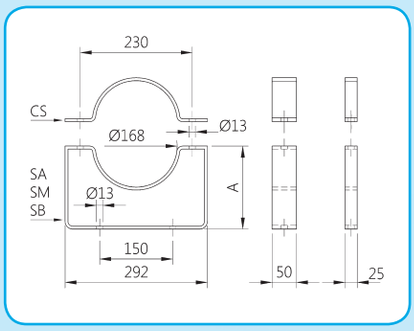

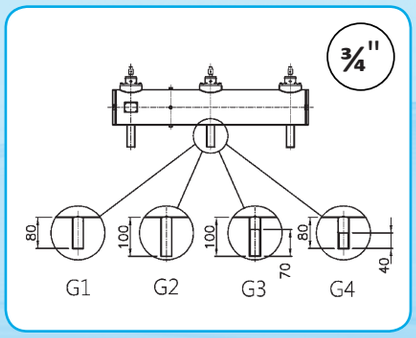

SHORT PLAIN OUTLET PIPE = G1
LONG PLAIN OUTLET PIPE = G2
LONG THREADED OUTLET PIPE = G3
SHORT THREADED OUTLET PIPE = G4

Cat_Turbo_2018_Serbatoi_EN.indd 19 16/01/19 12:01

6" INTEGRAL SERIES WITH 1" DN VALVES

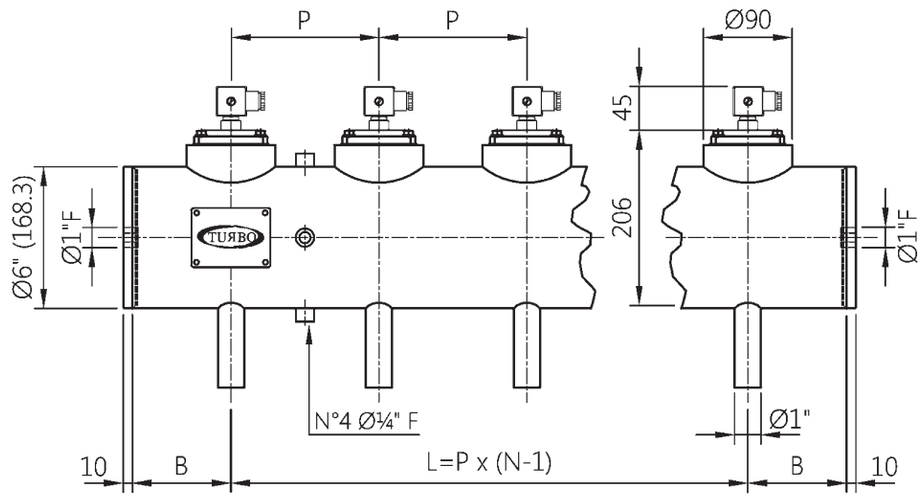

P min = 120 / B min = 90

For special versions of P min and B min, please contact our technical department

DESCRIPTION		TI025(N-V-T)P / TI025(N-V-T)M
1	Coil - Connector	BH10 V## / V##
2	Screws - Washers	TKITVTE06X18X4
3	Pilot unit	1331080
4	Pilot cover	1251750
5	Remote cover	1251770
6a	Diaphragm spring	3241002
6	Diaphragm (N-V-T)	TKISM025N Neoprene TKISM025V Viton TKISM025T Low temperature

V## / V## = 24 Vdc - 24 Vac - 115 Vac - 230 Vac

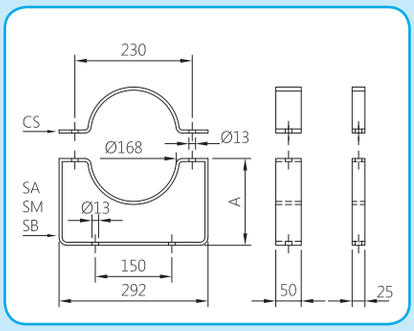

BRACKETS

CS = COLLAR
SA = HIGH SUPPORT A = 200
SM= MEDIUM SUPPORT A = 170
SB = LOW SUPPORT A = 109

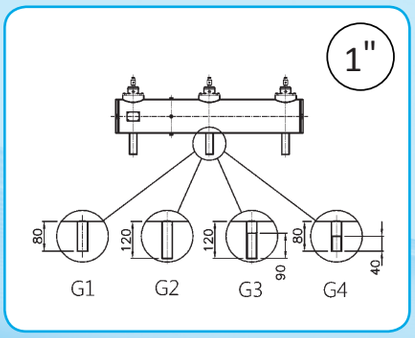

SHORT PLAIN OUTLET PIPE = G1
LONG PLAIN OUTLET PIPE = G2
LONG THREADED OUTLET PIPE = G3
SHORT THREADED OUTLET PIPE = G4

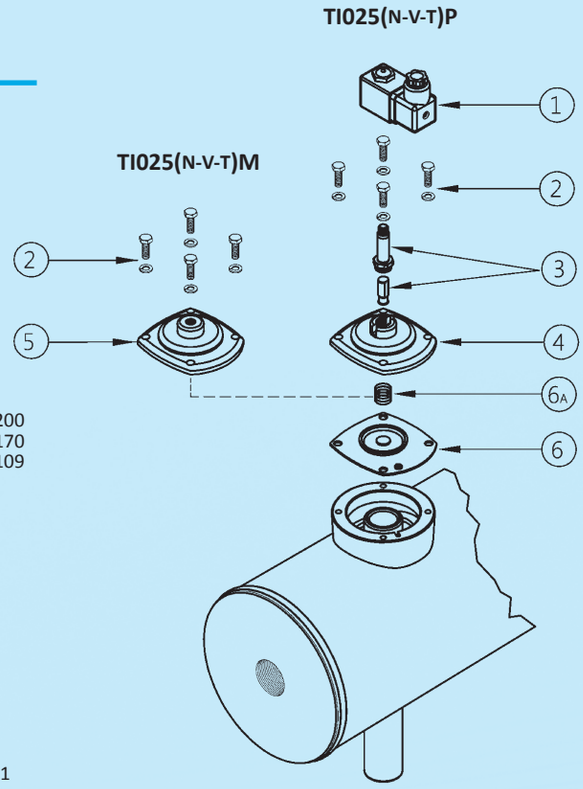

Cat_Turbo_2018_Serbatoi_EN.indd 20 16/01/19 12:01

6" INTEGRAL SERIES WITH 1½" DN VALVES

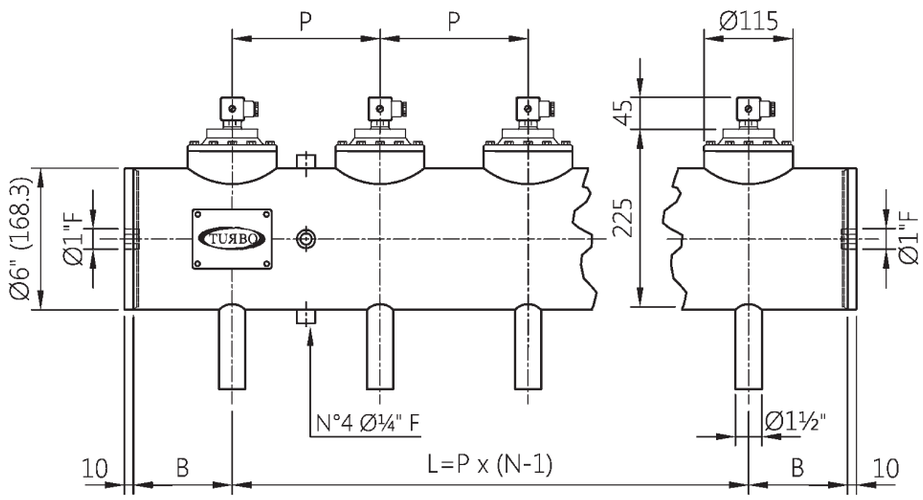

P min = 145 / B min = 100

For special versions of P min and B min, please contact our technical department

DESCRIPTION		TI030(N-V-T)P / TI030(N-V-T)M
1	Coil - Connector	BH10 V## / V##
2	Screws - Washers	TKITVTE06X20X6
3	Pilot unit	1331080
4	Pilot cover	1251802
5	Remote cover	1251805
6	Diaphragm spring	3241018
7	Diaphragm (N-V-T)	TKISM030N Neoprene TKISM030V Viton TKISM030T Low temperature

V## / V## = 24 Vdc - 24 Vac - 115 Vac - 230 Vac

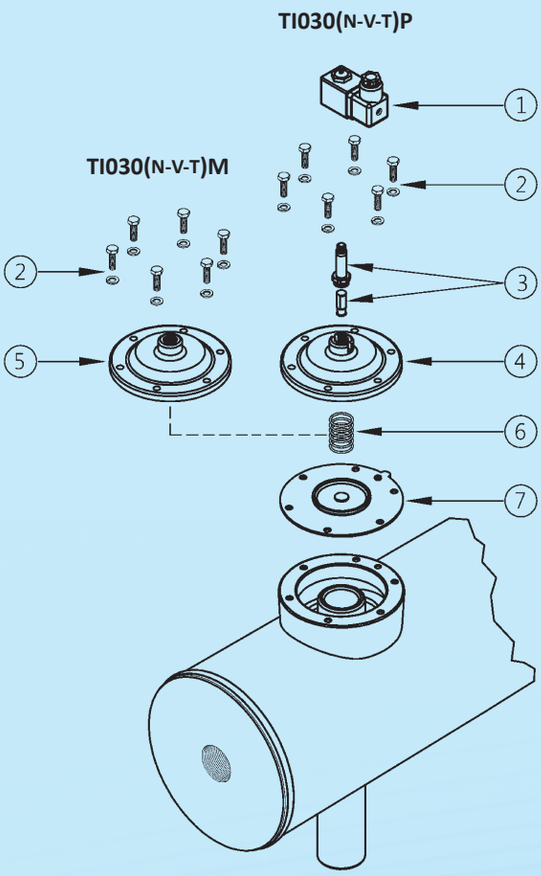

BRACKETS

CS = COLLAR
SA = HIGH SUPPORT A = 200
SM= MEDIUM SUPPORT A = 170
SB = LOW SUPPORT A = 109

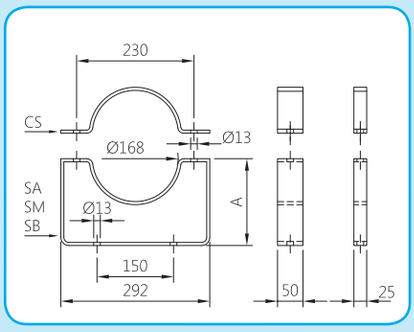

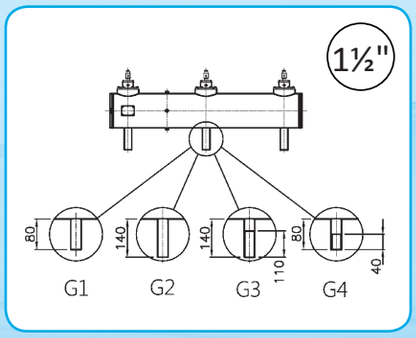

SHORT PLAIN OUTLET PIPE = G1
LONG PLAIN OUTLET PIPE = G2
LONG THREADED OUTLET PIPE = G3
SHORT THREADED OUTLET PIPE = G4

6" INTEGRAL SERIES WITH 1½" DN VALVES

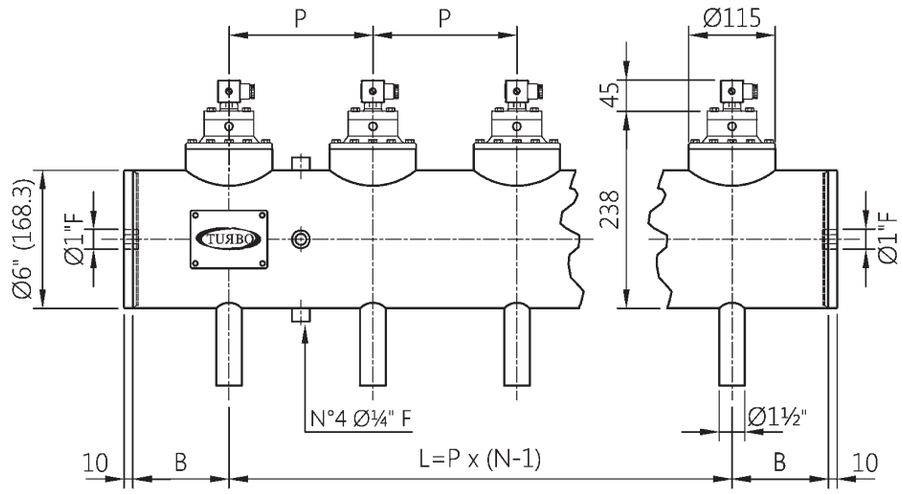

P min = 145 / B min = 100

For special versions of P min and B min, please contact our technical department

DESCRIPTION		TI035(N-V-T)P / TI035(N-V-T)M
1	Coil - Connector	BH10 V## / V##
2	Screws - Washers	TKITVTE06X18X4
3	Pilot unit	1331080
4	Pilot cover	1251720
5	Remote cover	1251740
6	Diaphragm spring	3241006
7	0.5 ÷ 6 bar - 0.5 ÷ 8 bar Secondary diaphragm (N-V-T)	TKISM010N Neoprene TKISM010V Viton TKISM010T Low temperature
8	Screws - Washers	TKITVTE06X20X6
9	Cover	1251810
10	Diaphragm spring	3241018
11	Primary diaphragm (N-V-T)	TKISM035N Neoprene TKISM035V Viton TKISM035T Low temperature

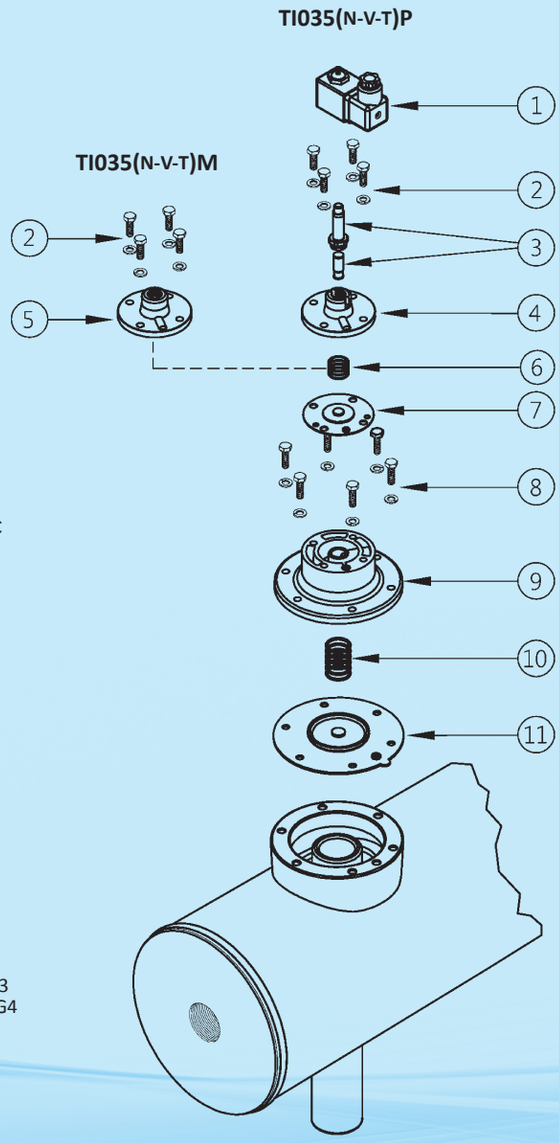

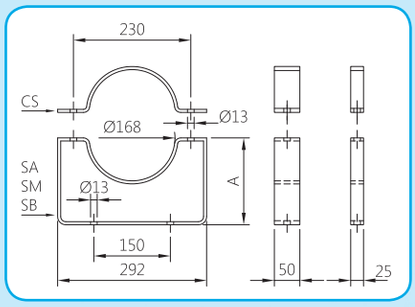

V## / V## = 24 Vdc - 24 Vac - 115 Vac - 230 Vac

BRACKETS

CS = COLLAR
SA = HIGH SUPPORT A = 200
SM= MEDIUM SUPPORT A = 170
SB = LOW SUPPORT A = 109

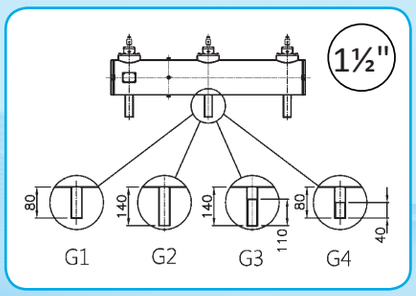

SHORT PLAIN OUTLET PIPE = G1
LONG PLAIN OUTLET PIPE = G2
LONG THREADED OUTLET PIPE = G3
SHORT THREADED OUTLET PIPE = G4

Cat_Turbo_2018_Serbatoi_EN.indd 22 16/01/19 12:01

8" INTEGRAL SERIES WITH 1" DN VALVES

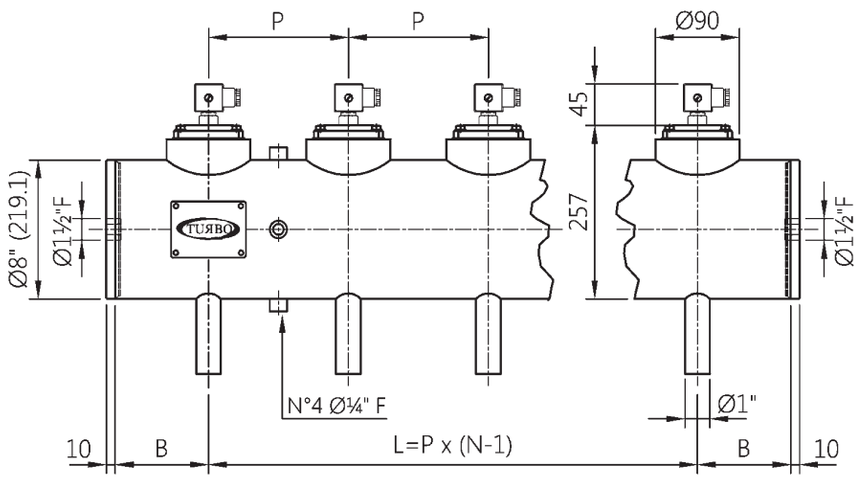

P min = 120 / B min = 100

For special versions of P min and B min, please contact our technical department

DESCRIPTION		TI025(N-V-T)P / TI025(N-V-T)M
1	Coil - Connector	BH10 V## / V##
2	Screws - Washers	TKITVTE06X18X4
3	Pilot unit	1331080
4	Pilot cover	1251750
5	Remote cover	1251770
6a	Diaphragm spring	3241002
6	Diaphragm (N-V-T)	TKISM025N Neoprene TKISM025V Viton TKISM025T Low temperature

V## / V## = 24 Vdc - 24 Vac - 115 Vac - 230 Vac

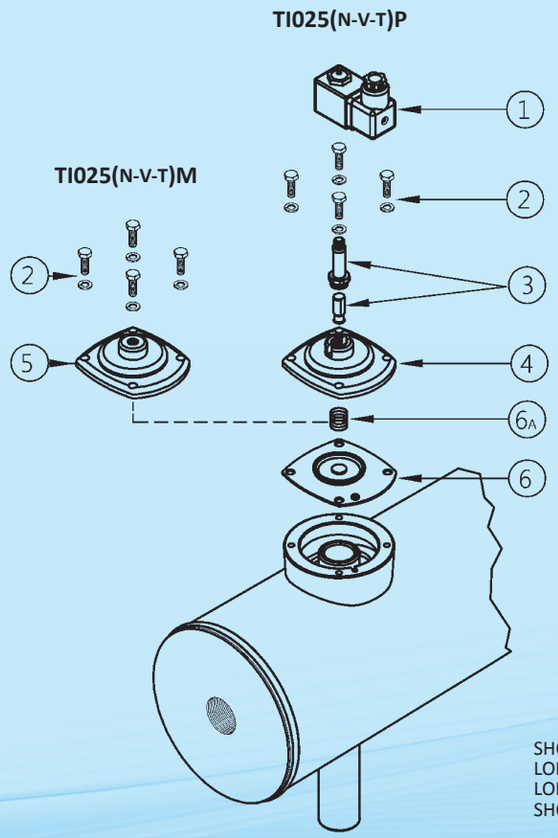

BRACKETS

CS = COLLAR
SA = HIGH SUPPORT A = 270
SM= MEDIUM SUPPORT A = 210
SB = LOW SUPPORT A = 134

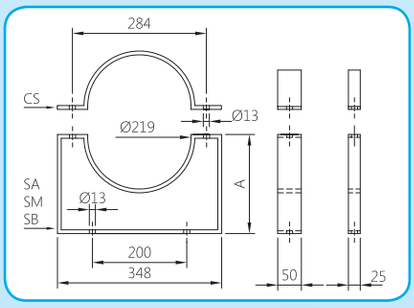

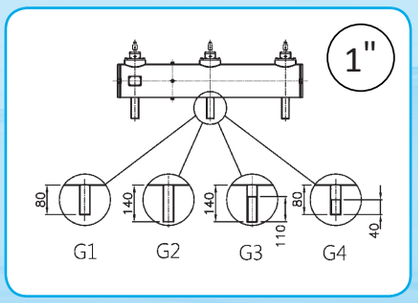

SHORT PLAIN OUTLET PIPE = G1
LONG PLAIN OUTLET PIPE = G2
LONG THREADED OUTLET PIPE = G3
SHORT THREADED OUTLET PIPE = G4

8" INTEGRAL SERIES WITH 1½" DN VALVES

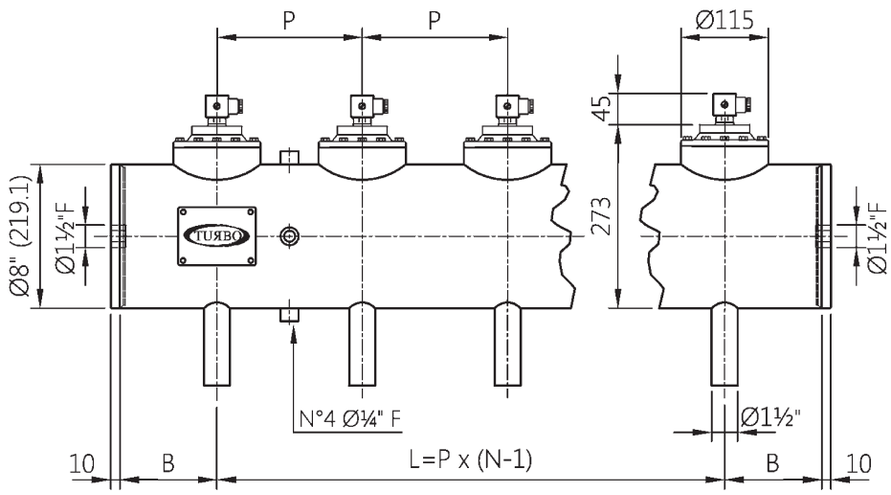

P min = 145 / B min = 100

For special versions of P min and B min, please contact our technical department

DESCRIPTION		TI030(N-V-T)P / TI030(N-V-T)M
1	Coil - Connector	BH10 V## / V##
2	Screws - Washers	TKITVTE06X20X6
3	Pilot unit	1331080
4	Pilot cover	1251802
5	Remote cover	1251805
6	Diaphragm spring	3241018
7	Diaphragm (N-V-T)	TKISM030N Neoprene TKISM030V Viton TKISM030T Low temperature

V## / V## = 24 Vdc - 24 Vac - 115 Vac - 230 Vac

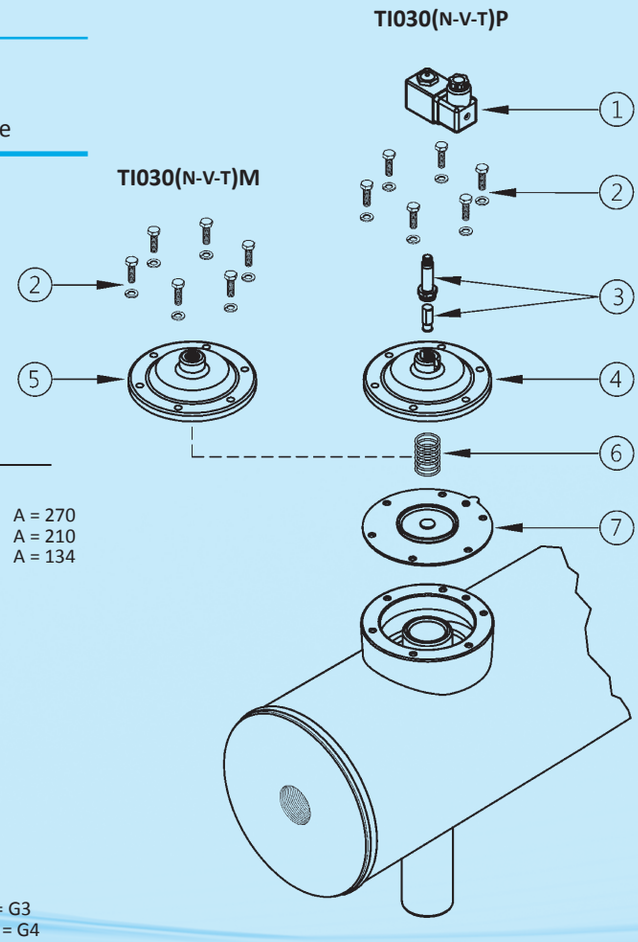

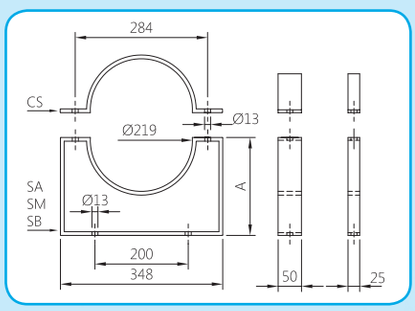

BRACKETS

CS = COLLAR
SA = HIGH SUPPORT A = 270
SM= MEDIUM SUPPORT A = 210
SB = LOW SUPPORT A = 134

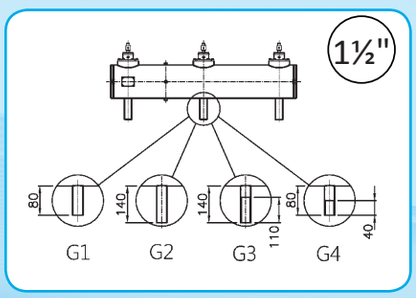

SHORT PLAIN STUB = G1
LONG PLAIN STUB = G2
LONG THREADED STUB = G3
SHORT THREADED STUB = G4

Cat_Turbo_2018_Serbatoi_EN.indd 24 16/01/19 12:01

8" INTEGRAL SERIES WITH 1½" DN VALVES

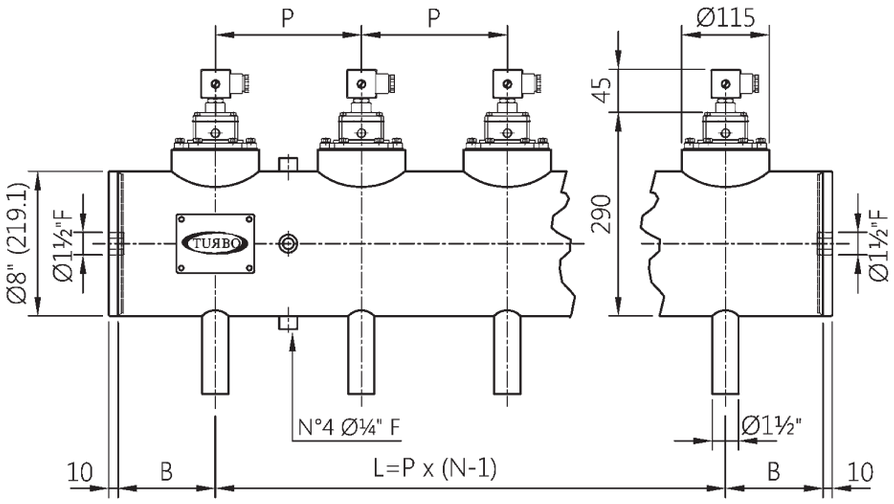

P min = 145 / B min = 100

For special versions of P min and B min, please contact our technical department

DESCRIPTION		TI035(N-V-T)P / TI035(N-V-T)M
1	Coil - Connector	BH10 V## / V##
2	Screws - Washers	TKITVTE06X18X4
3	Pilot unit	1331080
4	Pilot cover	1251720
5	Remote cover	1251740
6	Diaphragm spring	3241006
7	Secondary Diaphragm (N-V-T)	TKISM010N Neoprene TKISM010V Viton TKISM010T Low temperature
8	Screws - Washers	TKITVTE06X20X6
9	Cover	1251810
10	Diaphragm spring	3241018
11	Primary diaphragm (N-V-T)	TKISM035N Neoprene TKISM035V Viton TKISM035T Low temperature

TI035(N-V-T)P

TI035(N-V-T)M

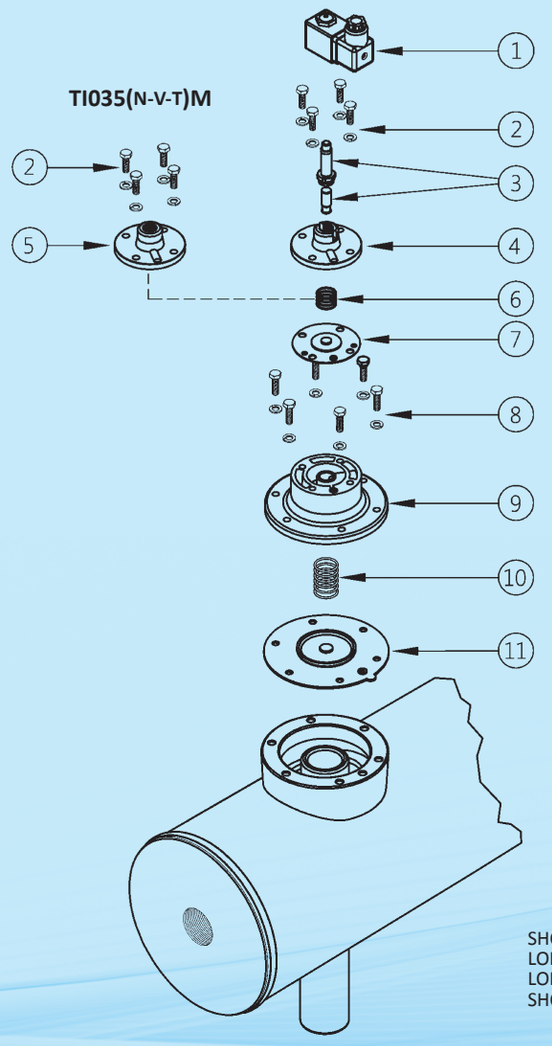

V## / V## = 24 Vdc - 24 Vac - 115 Vac - 230 Vac

BRACKETS

CS = COLLAR
SA = HIGH SUPPORT A = 270
SM= MEDIUM SUPPORT A = 210
SB = LOW SUPPORT A = 134

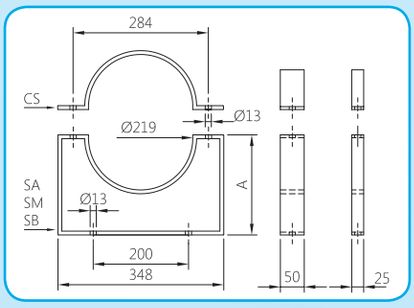

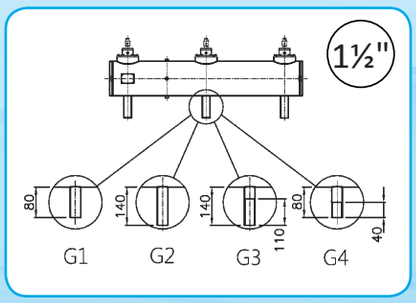

SHORT PLAIN OUTLET PIPE = G1
LONG PLAIN OUTLET PIPE = G2
LONG THREADED OUTLET PIPE = G3
SHORT THREADED OUTLET PIPE = G4

8" INTEGRAL SERIES WITH 1½" DN VALVES

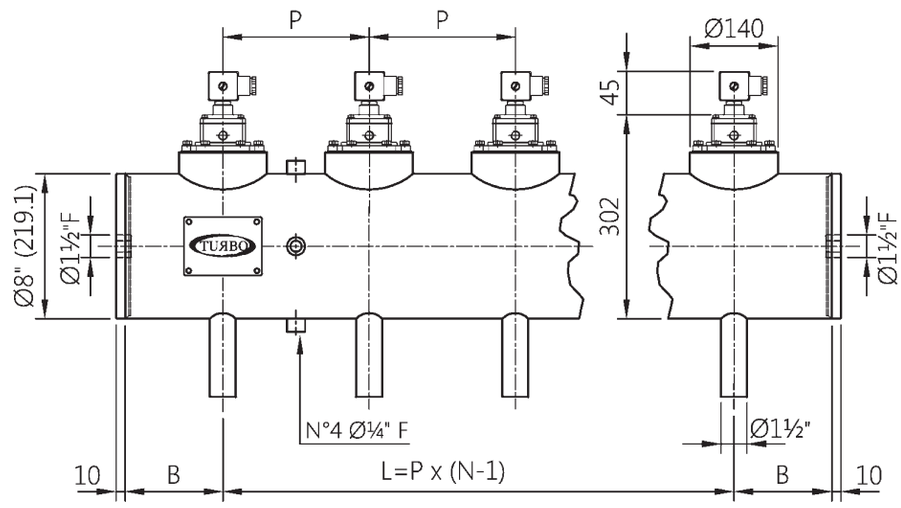

P min = 160 / B min = 100

For special versions of P min and B min, please contact our technical department

DESCRIPTION		TI040(N-V-T)P / TI040(N-V-T)M
1	Coil - Connector	BH10 V## / V##
2	Screws - Washers	TKITVTE06X20X4
3	Pilot unit	1331080
4	Pilot cover	1251750
5	Remote cover	1251770
6	Secondary Diaphragm (N-V-T)	TKISM025N Neoprene TKISM025V Viton TKISM025T Low temperature
6a	Diaphragm spring	3241002
7	Screws - Washers	TKITVTE08X20X6
8	Cover	1251620
9	Diaphragm spring	3241024
10	Primary diaphragm (N-V-T)	TKISM040N Neoprene TKISM040V Viton TKISM040T Low temperature

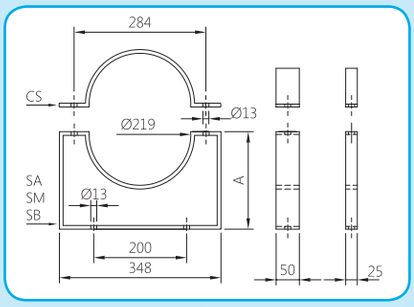

V## / V## = 24 Vdc - 24 Vac - 115 Vac - 230 Vac

BRACKETS

CS = COLLAR
SA = HIGH SUPPORT A = 270
SM= MEDIUM SUPPORT A = 210
SB = LOW SUPPORT A = 134

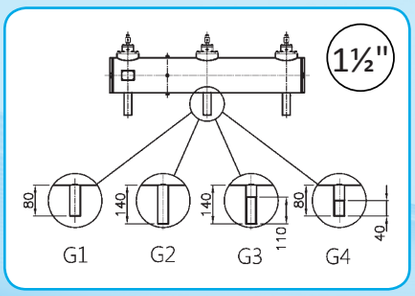

SHORT PLAIN OUTLET PIPE = G1
LONG PLAIN OUTLET PIPE = G2
LONG THREADED OUTLET PIPE = G3
SHORT THREADED OUTLET PIPE = G4

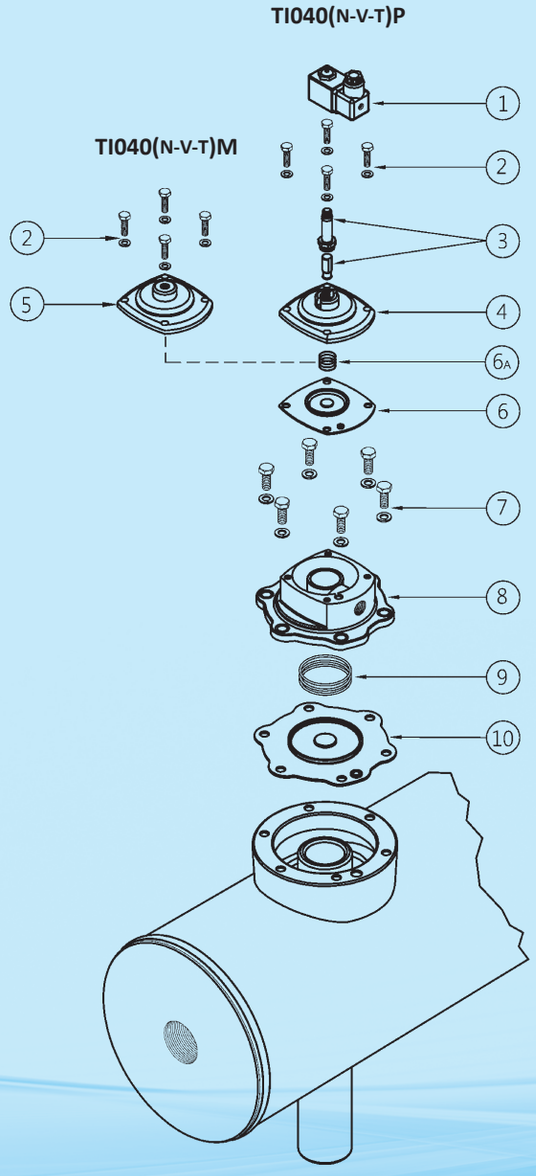

Cat_Turbo_2018_Serbatoi_EN.indd 26 16/01/19 12:01

8" INTEGRAL SERIES WITH 1½" DN VALVES

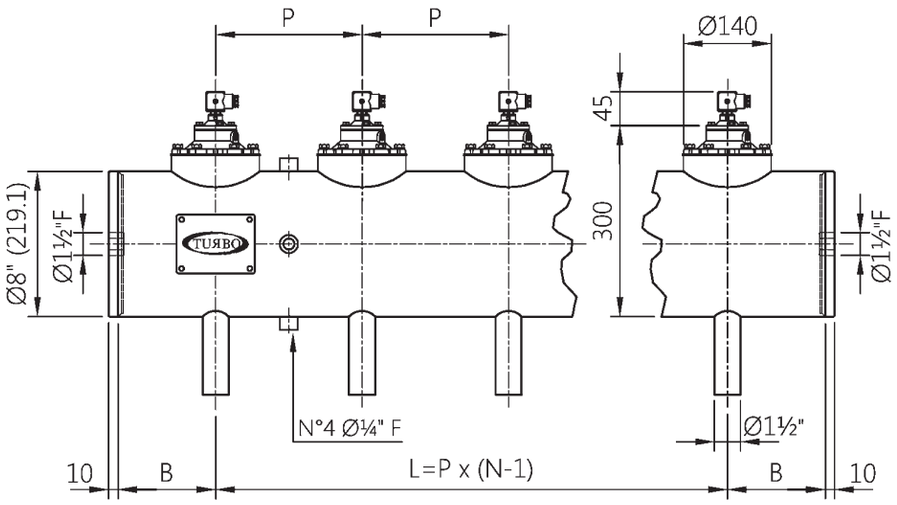

P min = 160 / B min = 100

For special versions of P min and B min, please contact our technical department

DESCRIPTION		TI045(N-V-T)P / TI045(N-V-T)M
1	Coil - Connector	BH10 V## / V##
2	Screws - Washers	TKITVTE06X18X4
3	Pilot unit	1331080
4	Pilot cover	1251715
5	Remote cover	1251745
6	Diaphragm spring	3241006
7	Secondary diaphragm (N-V-T)	TKISM010N Neoprene TKISM010V Viton TKISM010T Low temperature
8	Screws - Washers	TKITVTE08X20X6
9	Cover	1251840
10	Diaphragm spring	3241024
11	Primary diaphragm (N-V-T)	TKISM045N Neoprene TKISM045V Viton TKISM045T Low temperature

TI045(N-V-T)P

TI045(N-V-T)M

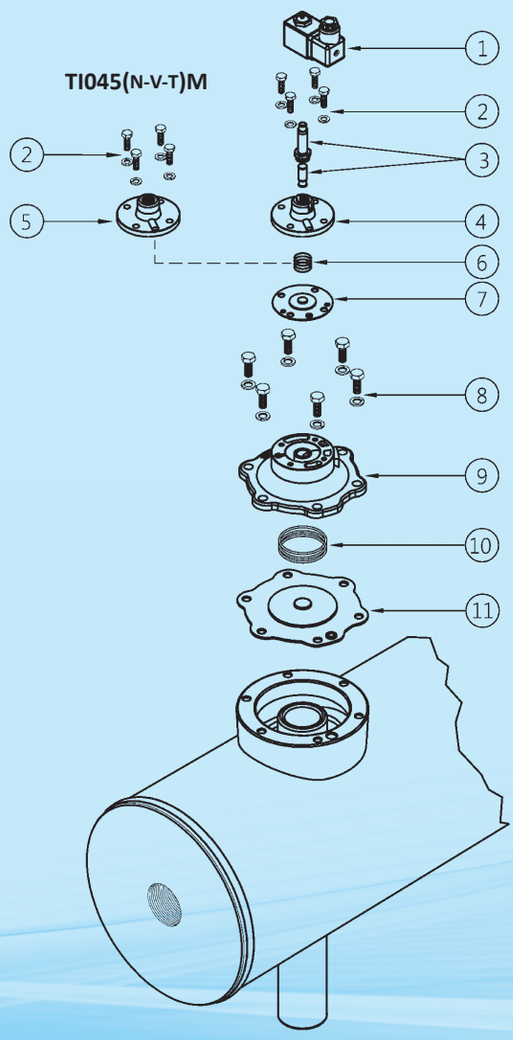

V## / V## = 24 Vdc - 24 Vac - 115 Vac - 230 Vac

BRACKETS

CS = COLLAR
SA = HIGH SUPPORT A = 270
SM= MEDIUM SUPPORT A = 210
SB = LOW SUPPORT A = 134

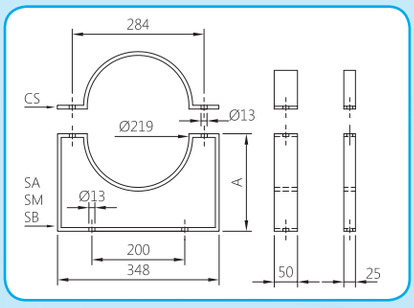

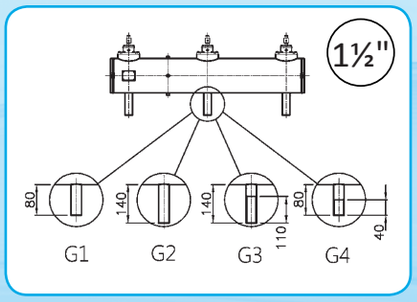

SHORT PLAIN OUTLET PIPE = G1
LONG PLAIN OUTLET PIPE = G2
LONG THREADED OUTLET PIPE = G3
SHORT THREADED OUTLET PIPE = G4

10" INTEGRAL SERIES WITH 1½" DN VALVES

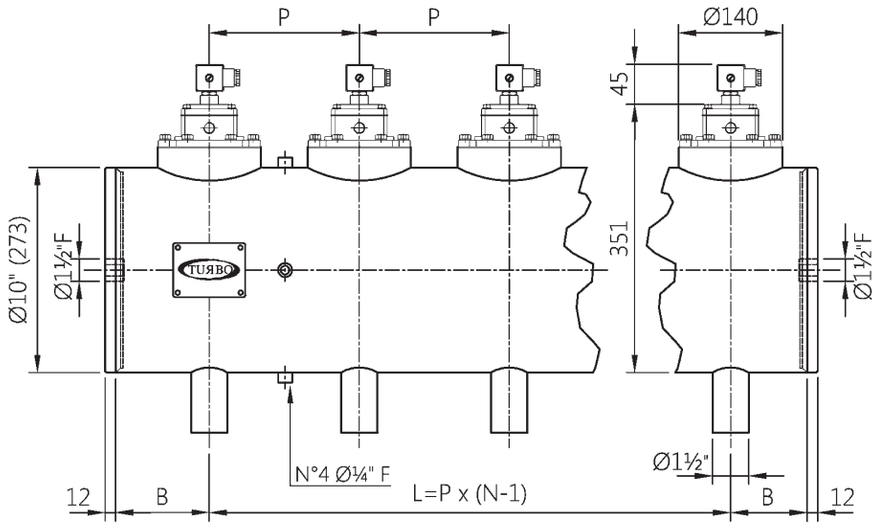

P min = 170 / B min = 100

For special versions of P min and B min, please contact our technical department

DESCRIPTION		TI040(N-V-T)P / TI040(N-V-T)M
1	Coil - Connector	BH10 V## / V##
2	Screws - Washers	TKITVTE06X20X4
3	Pilot unit	1331080
4	Pilot cover	1251750
5	Remote cover	1251770
6	Secondary diaphragm (N-V-T)	TKISM025N Neoprene TKISM025V Viton TKISM025T Low temperature
6a	Diaphragm spring	3241002
7	Screws - Washers	TKITVTE08X20X6
8	Cover	1251620
9	Diaphragm spring	3241024
10	Primary Diaphragm (N-V-T)	TKISM040N Neoprene TKISM040V Viton TKISM040T Low temperature

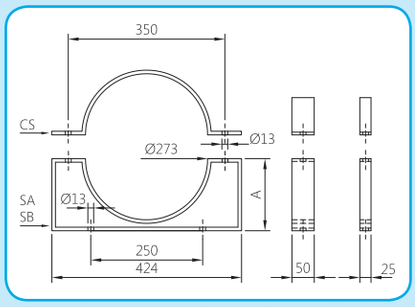

V## / V## = 24 Vdc - 24 Vac - 115 Vac - 230 Vac

BRACKETS

CS = COLLAR
SA = HIGH SUPPORT A = 273
SB = LOW SUPPORT A = 161

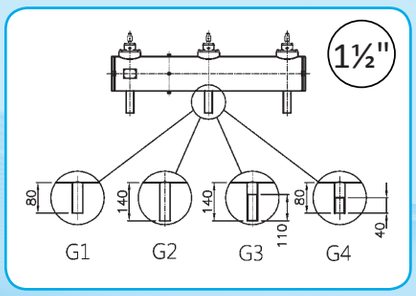

SHORT PLAIN OUTLET PIPE = G1
LONG PLAIN OUTLET PIPE = G2
LONG THREADED OUTLET PIPE = G3
SHORT THREADED OUTLET PIPE = G4

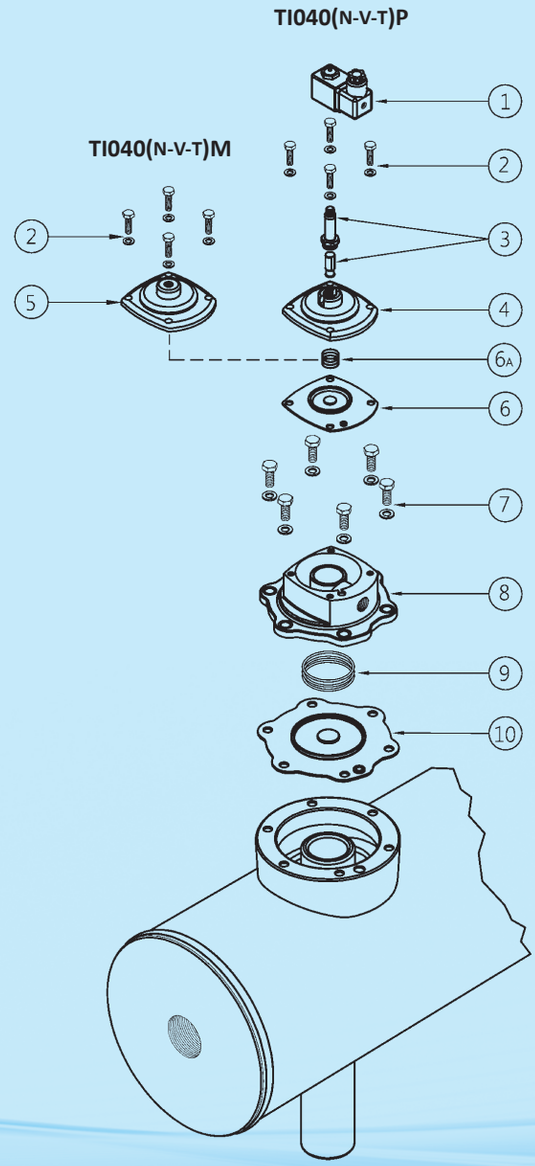

Cat_Turbo_2018_Serbatoi_EN.indd 28 16/01/19 12:01

10" INTEGRAL SERIES WITH 2" DN VALVES

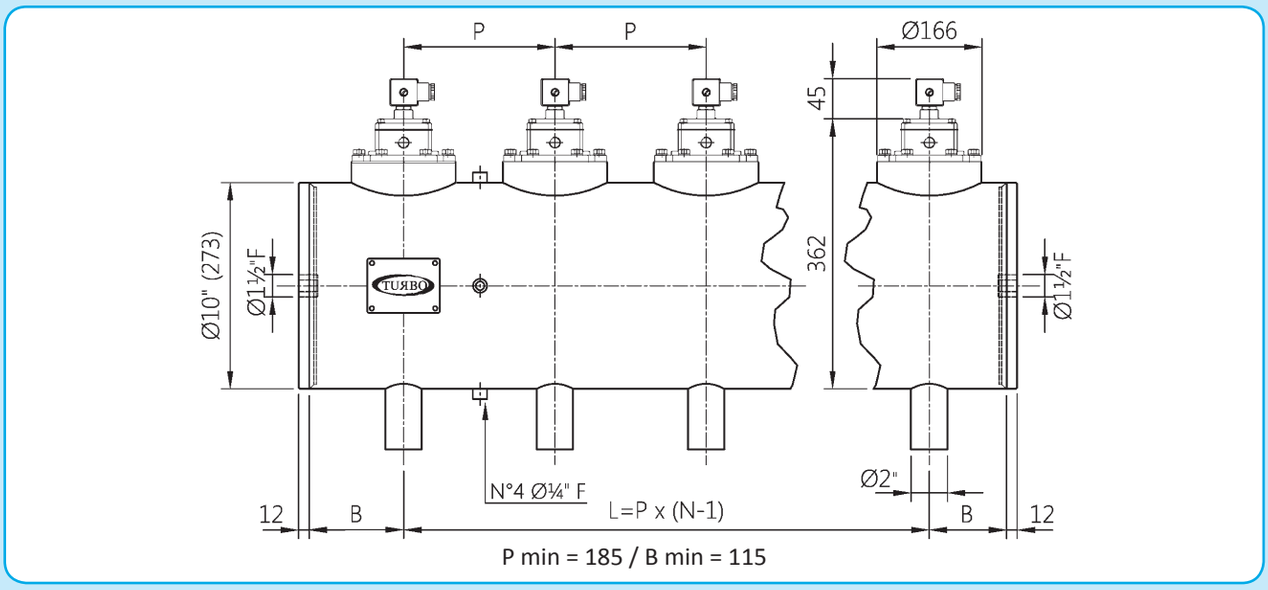

For special versions of P min and B min, please contact our technical department

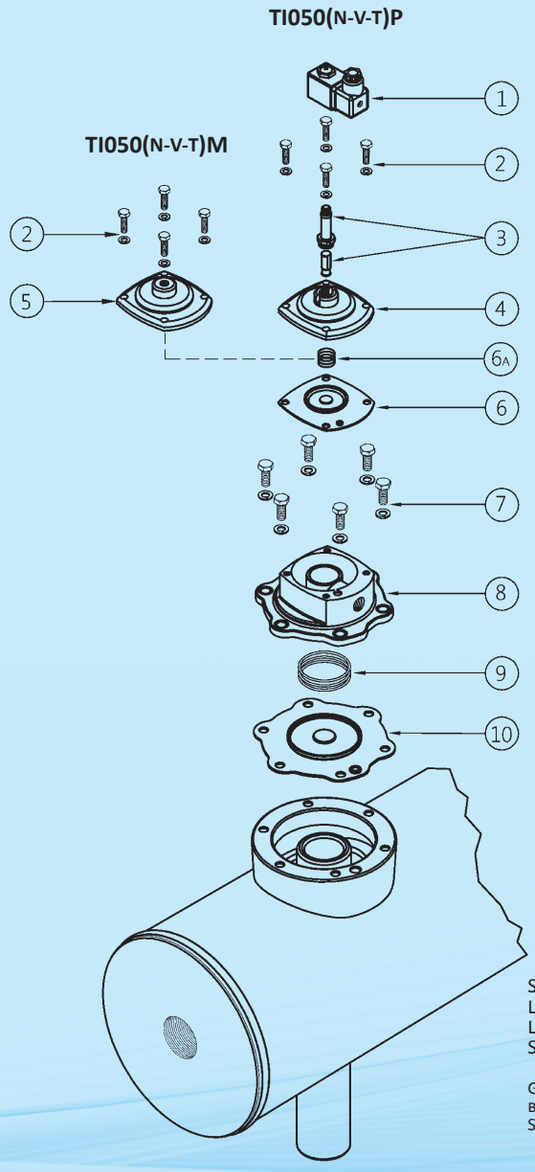

DESCRIPTION		TI050(N-V-T)P / TI050(N-V-T)M
1	Coil - Connector	BH10 V## / V##
2	Screws - Washers	TKITVTE06X20X4
3	Pilot unit	1331080
4	Pilot cover	1251750
5	Remote cover	1251770
6	Secondary diaphragm (N-V-T)	TKISM025N Neoprene TKISM025V Viton TKISM025T Low temperature
6a	Diaphragm spring	3241002
7	Screws - Washers	TKITVTE10X25X6
8	Cover	1251650
9	Diaphragm spring	3241024
10	Primary Diaphragm (N-V-T)	TKISM050N Neoprene TKISM050V Viton TKISM050T Low temperature

V## / V## = 24 Vdc - 24 Vac - 115 Vac - 230 Vac

BRACKETS

CS = COLLAR
SA = HIGH SUPPORT A = 273
SB = LOW SUPPORT A = 161

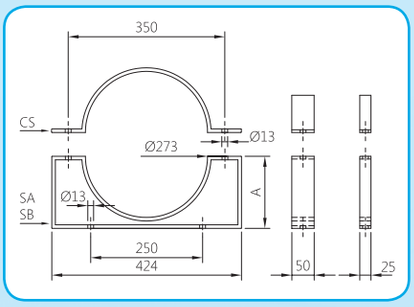

SHORT PLAIN OUTLET PIPE = G1
LONG PLAIN OUTLET PIPE = G2
LONG THREADED OUTLET PIPE = G3
SHORT THREADED OUTLET PIPE = G4

G5(*) USED FOR COUPLING WITH PD55 BULK CONNECTORS VIA SA10 BRACKET

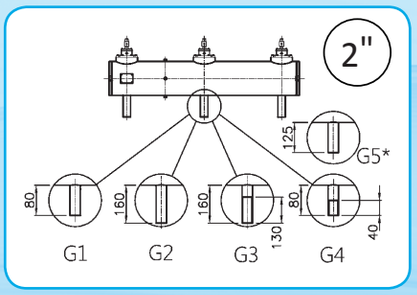

10" INTEGRAL SERIES WITH 2½" DN VALVES

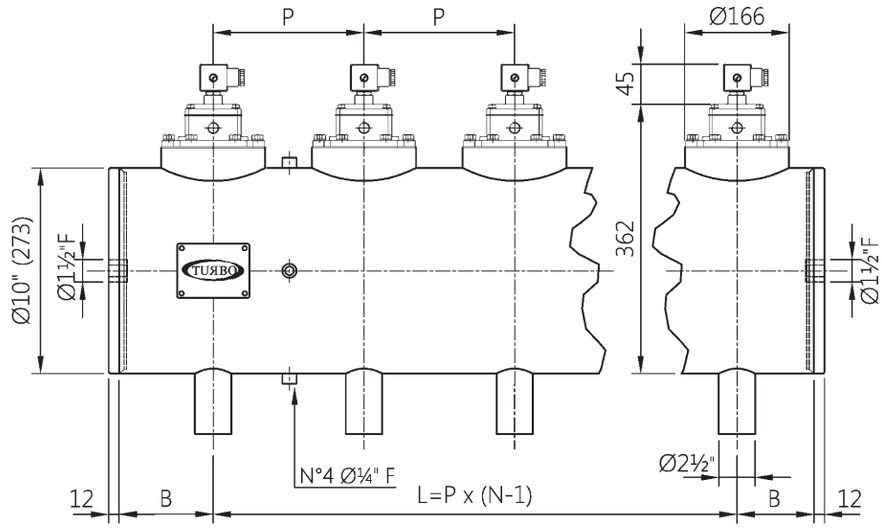

P min = 185 / B min = 120

For special versions of P min and B min, please contact our technical department

DESCRIPTION		TI060(N-V-T)P / TI060(N-V-T)M
1	Coil - Connector	BH10 V## / V##
2	Screws - Washers	TKITVTE06X20X4
3	Pilot unit	1331080
4	Pilot cover	1251750
5	Remote cover	1251770
6	Secondary diaphragm (N-V-T)	TKISM025N Neoprene TKISM025V Viton TKISM025T Low temperature
6a	Diaphragm spring	3241002
7	Screws - Washers	TKITVTE10X25X6
8	Cover	1251650
9	Diaphragm spring	3241024
10	Primary Diaphragm (N-V-T)	TKISM060N Neoprene TKISM060V Viton TKISM060T Low temperature

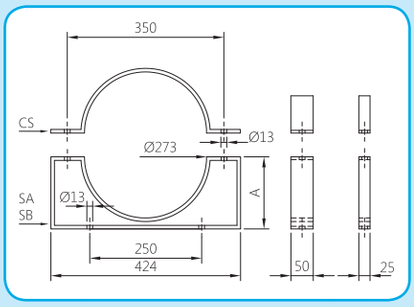

V## / V## = 24 Vdc - 24 Vac - 115 Vac - 230 Vac

BRACKETS

CS = COLLAR
SA = HIGH SUPPORT A = 273
SB = LOW SUPPORT A = 161

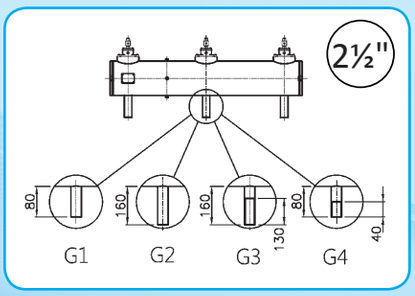

SHORT PLAIN OUTLET PIPE = G1
LONG PLAIN OUTLET PIPE = G2
LONG THREADED OUTLET PIPE = G3
SHORT THREADED OUTLET PIPE = G4

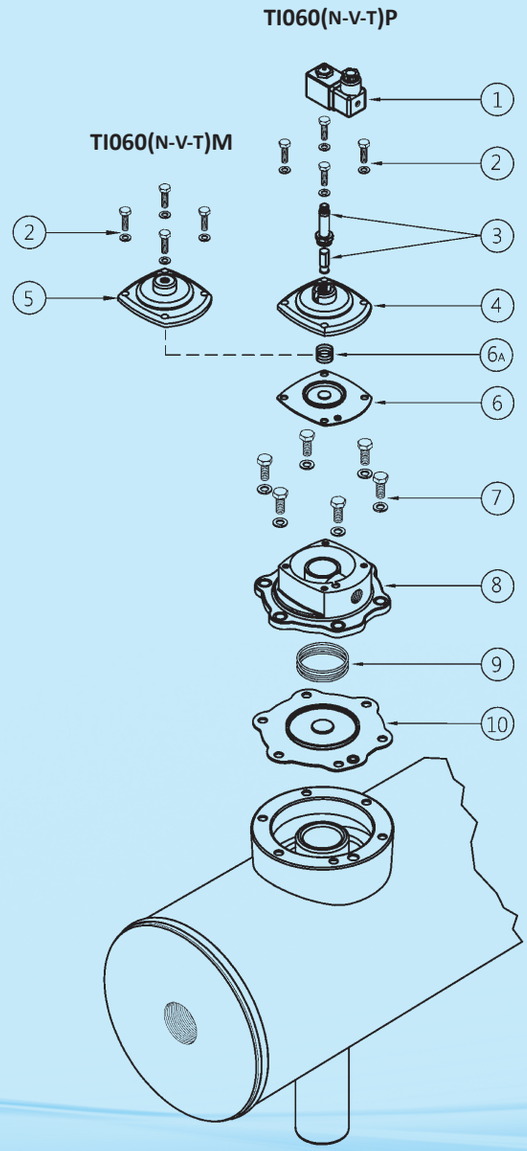

Cat_Turbo_2018_Serbatoi_EN.indd 30 16/01/19 12:01

12" INTEGRAL SERIES WITH 2½" DN VALVES

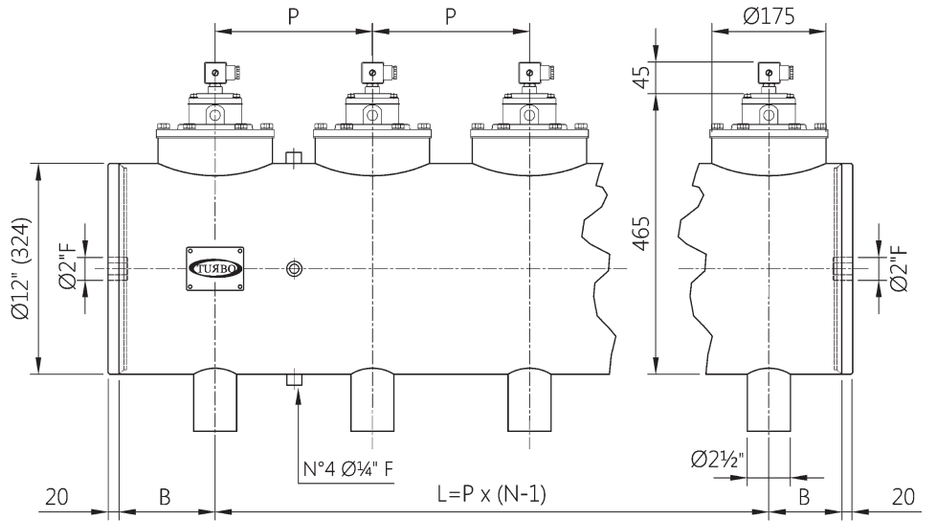

P min = 185 / B min = 120

For special versions of P min and B min, please contact our technical department

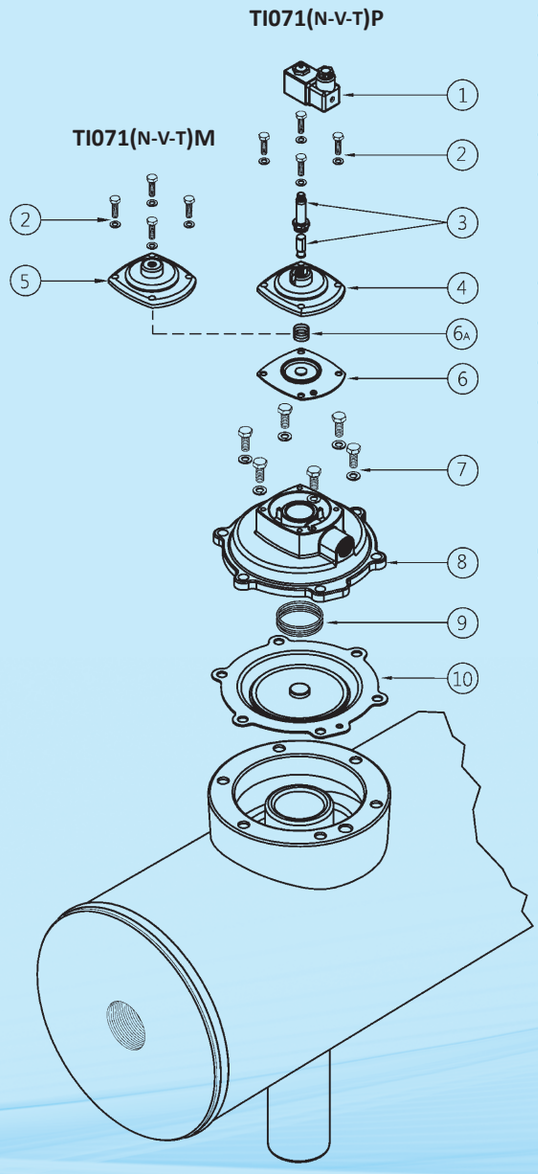

DESCRIPTION		TI071(N-V-T)P / TI071(N-V-T)M
1	Coil - Connector	BH10 V## / V##
2	Screws - Washers	TKITVTE06X20X4
3	Pilot unit	1331080
4	Pilot cover	1251750
5	Remote cover	1251770
6	Secondary diaphragm (N-V-T)	TKISM025N Neoprene TKISM025V Viton TKISM025T Low temperature
6a	Diaphragm spring	3241002
7	Screws - Washers	TKITVTE10X25X6
8	Cover	1251850
9	Diaphragm spring	3241024
10	Primary Diaphragm (N-V-T)	TKISM080N Neoprene TKISM080V Viton TKISM080T Low temperature

V## / V## = 24 Vdc - 24 Vac - 115 Vac - 230 Vac

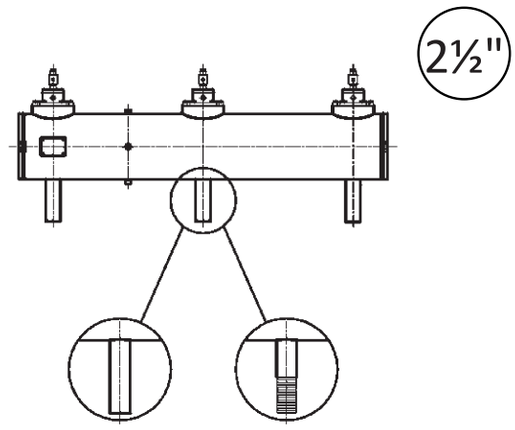

The customer is responsible for the size and type of outlet pipe

12" INTEGRAL SERIES WITH 3" DN VALVES

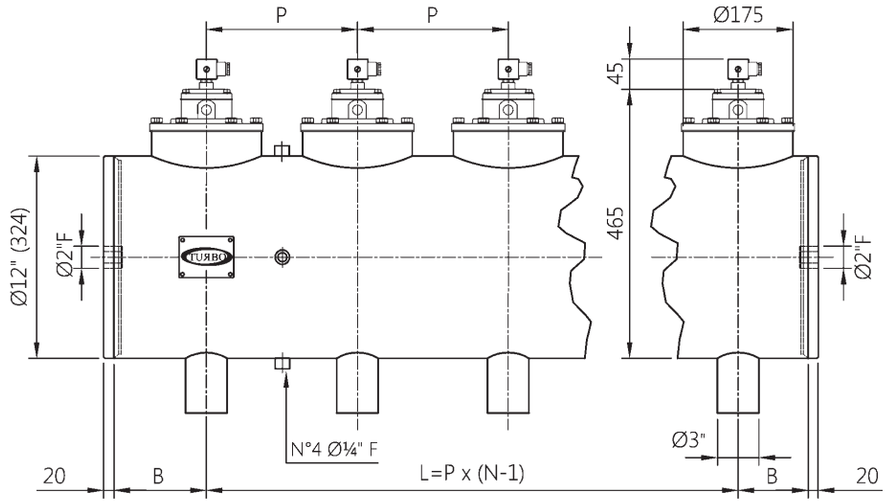

P min = 215 / B min = 125

For special versions of P min and B min, please contact our technical department

DESCRIPTION		TI075(N-V-T)P / TI075(N-V-T)M
1	Coil - Connector	BH10 V## / V##
2	Screws - Washers	TKITVTE06X20X4
3	Pilot unit	1331080
4	Pilot cover	1251750
5	Remote cover	1251770
6	Secondary diaphragm (N-V-T)	TKISM025N Neoprene TKISM025V Viton TKISM025T Low temperature
6a	Diaphragm spring	3241002
7	Screws - Washers	TKITVTE10X25X6
8	Cover	1251660
9	Diaphragm spring	3241024
10	Primary Diaphragm (N-V-T)	TKISM075N Neoprene TKISM075V Viton TKISM075T Low temperature

V## / V## = 24 Vdc - 24 Vac - 115 Vac - 230 Vac

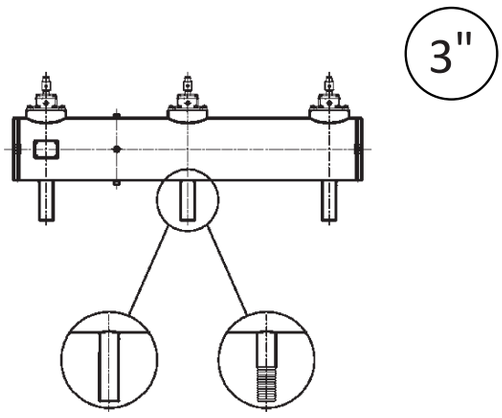

The customer is responsible for the size and type of outlet pipe

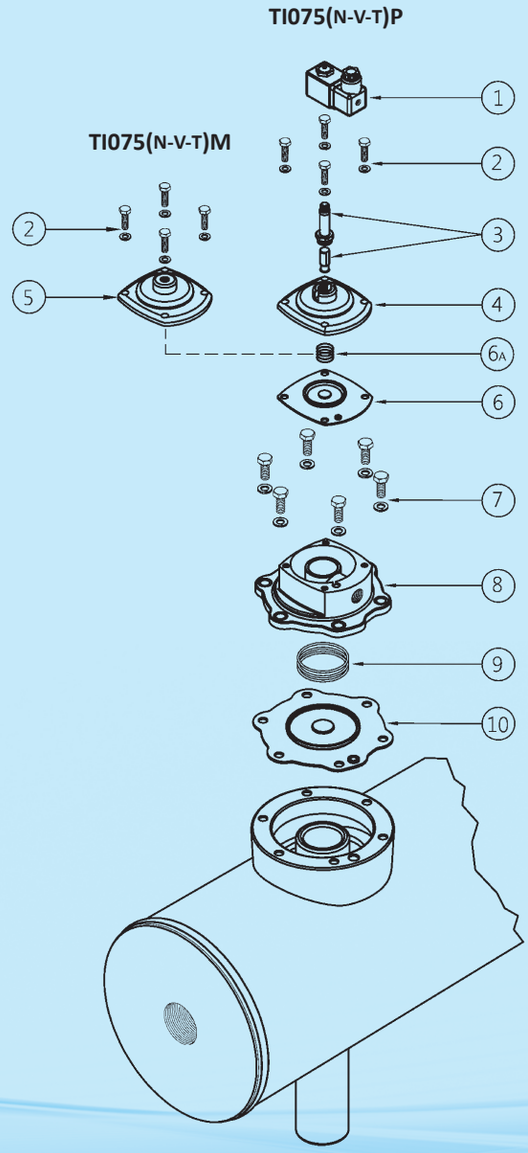

Cat_Turbo_2018_Serbatoi_EN.indd 32 16/01/19 12:01

12" INTEGRAL SERIES WITH 3" DN VALVES

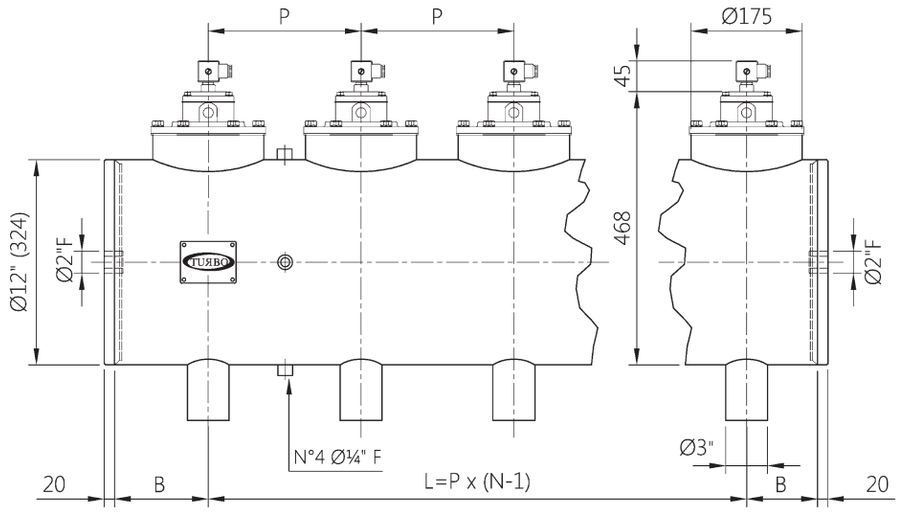

P min = 215 / B min = 125

For special versions of P min and B min, please contact our technical department

TI080(N-V-T)P

TI080(N-V-T)M

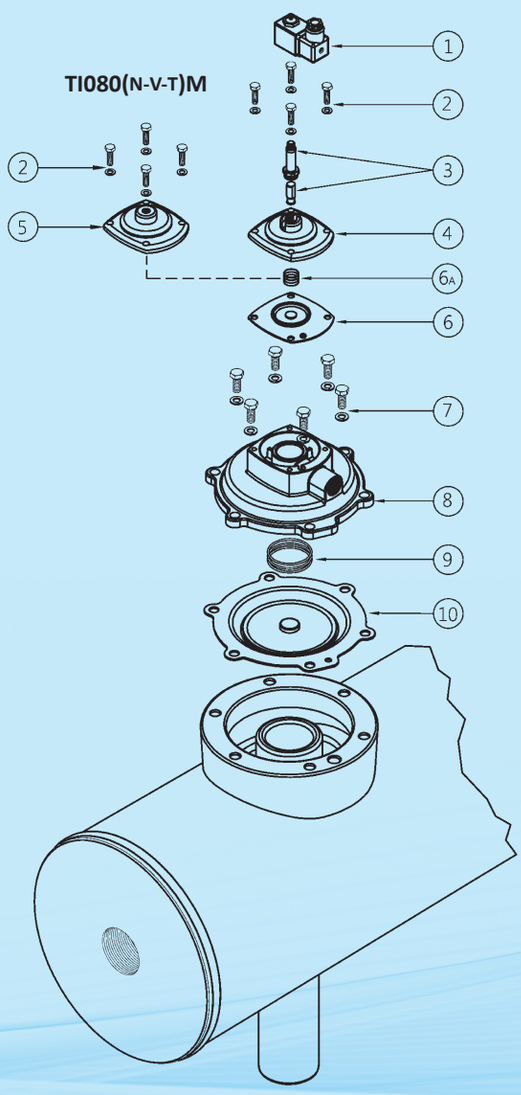

DESCRIPTION		TI080(N-V-T)P / TI080(N-V-T)M
1	Coil - Connector	BH10 V## / V##
2	Screws - Washers	TKITVTE06X20X4
3	Pilot unit	1331080
4	Pilot cover	1251750
5	Remote cover	1251770
6	Secondary diaphragm (N-V-T)	TKISM025N Neoprene TKISM025V Viton TKISM025T Low temperature
6a	Diaphragm spring	3241002
7	Screws - Washers	TKITVTE10X25X6
8	Cover	1251850
9	Diaphragm spring	3241024
10	Primary Diaphragm (N-V-T)	TKISM080N Neoprene TKISM080V Viton TKISM080T Low temperature

V## / V## = 24 Vdc - 24 Vac - 115 Vac - 230 Vac

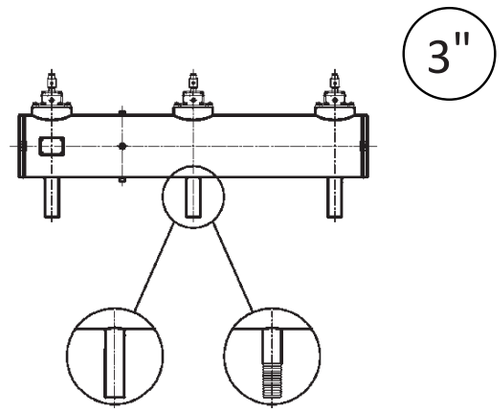

The customer is responsible for the size and type of outlet pipe

Cat_Turbo_2018_Serbatoi_EN.indd 33 16/01/19 12:01

14" INTEGRAL SERIES WITH 3" DN VALVES

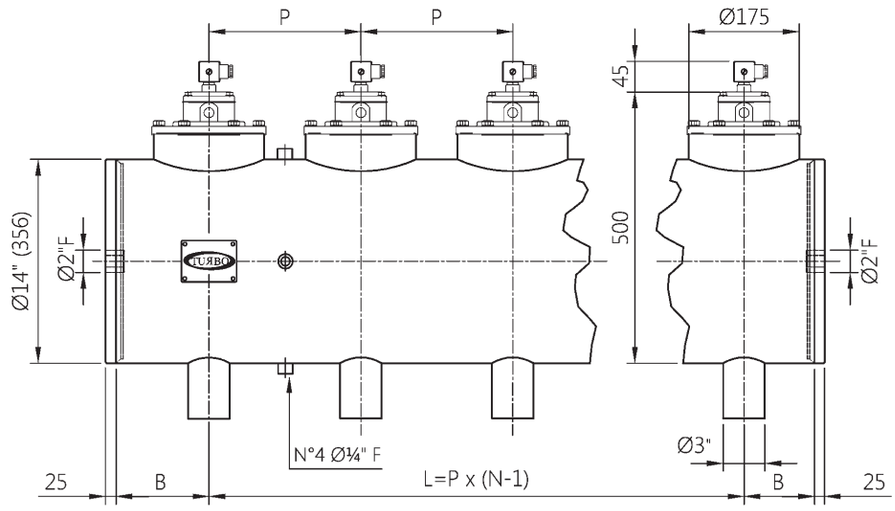

P min = 215 / B min = 125

For special versions of P min and B min, please contact our technical department

TI075(N-V-T)P

TI075(N-V-T)M

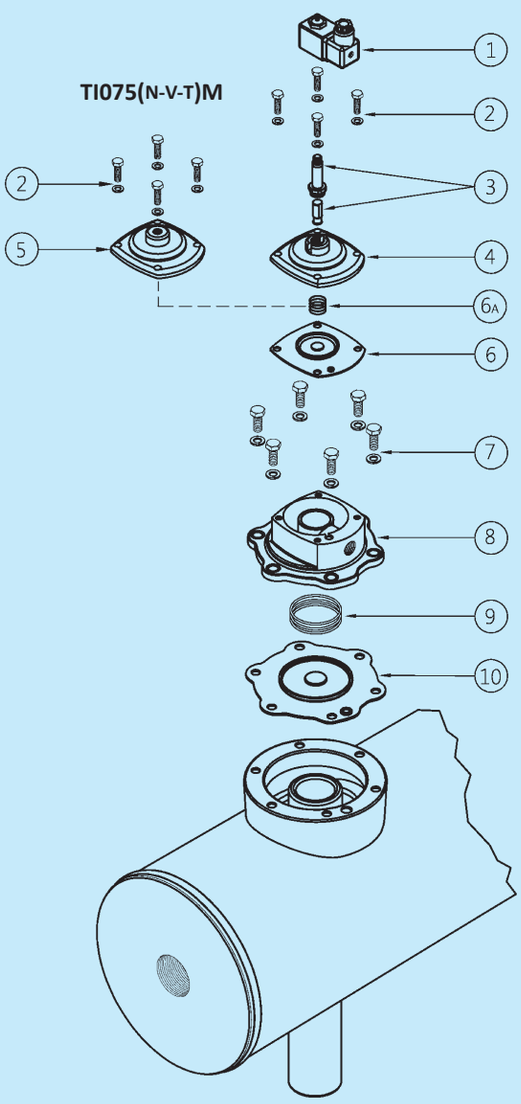

DESCRIPTION		TI075(N-V-T)P / TI075(N-V-T)M
1	Coil - Connector	BH10 V## / V##
2	Screws - Washers	TKITVTE06X20X4
3	Pilot unit	1331080
4	Pilot cover	1251750
5	Remote cover	1251770
6	Secondary diaphragm (N-V-T)	TKISM025N Neoprene TKISM025V Viton TKISM025T Low temperature
6a	Diaphragm spring	3241002
7	Screws - Washers	TKITVTE10X25X6
8	Cover	1251660
9	Diaphragm spring	3241024
10	Primary Diaphragm (N-V-T)	TKISM075N Neoprene TKISM075V Viton TKISM075T Low temperature

V## / V## = 24 Vdc - 24 Vac - 115 Vac - 230 Vac

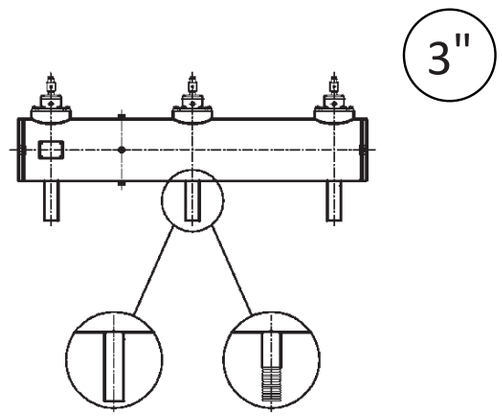

The customer is responsible for the size and type of outlet pipe

Cat_Turbo_2018_Serbatoi_EN.indd 34 16/01/19 12:01

14" INTEGRAL SERIES WITH 3" DN VALVES

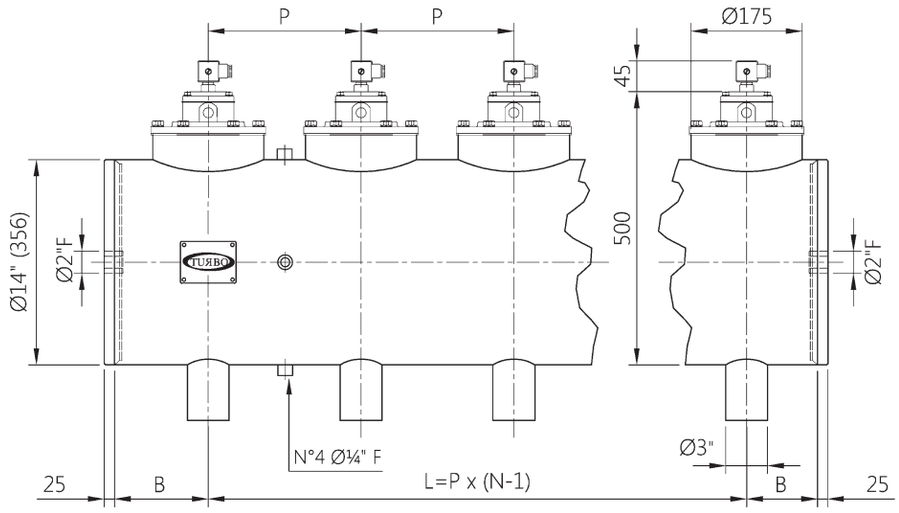

P min = 215 / B min = 125

For special versions of P min and B min, please contact our technical department

TI080(N-V-T)P

TI080(N-V-T)M

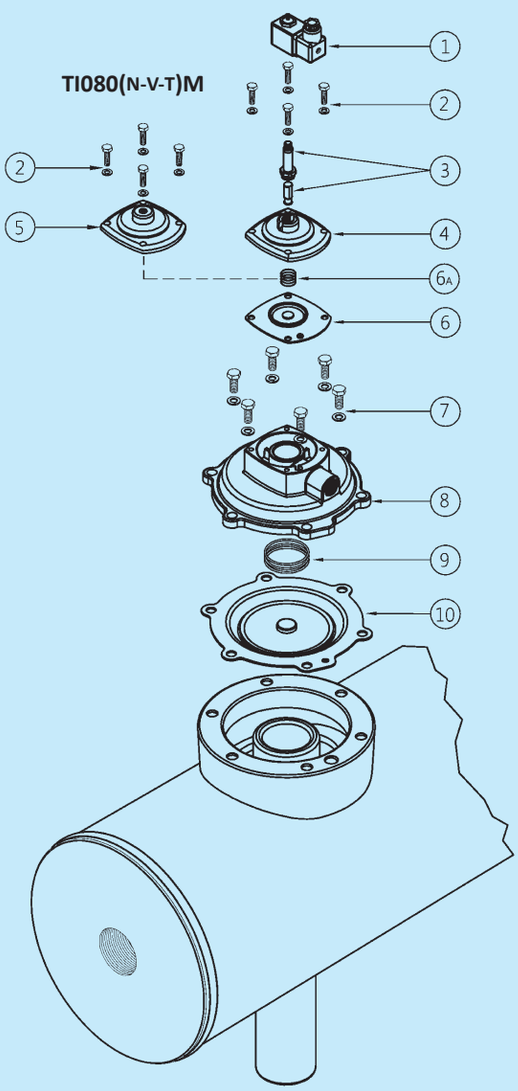

DESCRIPTION		TI080(N-V-T)P / TI080(N-V-T)M
1	Coil - Connector	BH10 V## / V##
2	Screws - Washers	TKITVTE06X20X4
3	Pilot unit	1331080
4	Pilot cover	1251750
5	Remote cover	1251770
6	Secondary diaphragm (N-V-T)	TKISM025N Neoprene TKISM025V Viton TKISM025T Low temperature
6a	Diaphragm spring	3241002
7	Screws - Washers	TKITVTE10X25X6
8	Cover	1251850
9	Diaphragm spring	3241024
10	Primary Diaphragm (N-V-T)	TKISM080N Neoprene TKISM080V Viton TKISM080T Low temperature

V## / V## = 24 Vdc - 24 Vac - 115 Vac - 230 Vac

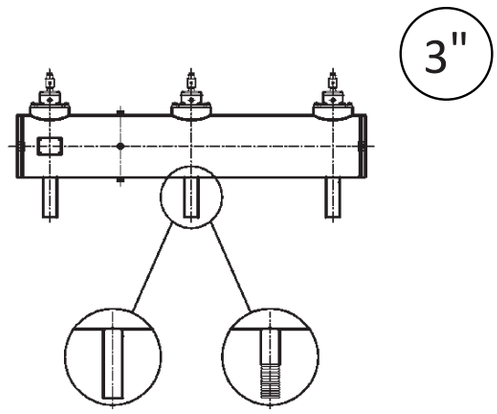

The customer is responsible for the size and type of outlet pipe

Cat_Turbo_2018_Serbatoi_EN.indd 35 16/01/19 12:01

14" Integral series with 3½" Dn valves

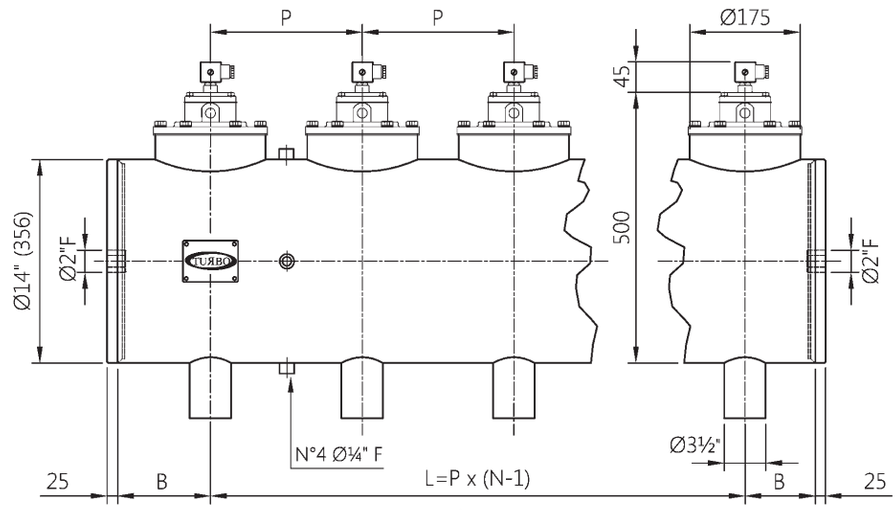

P min = 225 / B min = 125

For special versions of P min and B min, please contact our technical department

DESCRIPTION		TI0100(N-V-T)P / TI0100(N-V-T)M
1	Coil - Connector	BH10 V## / V##
2	Screws - Washers	TKITVTE06X20X4
3	Pilot unit	1331080
4	Pilot cover	1251750
5	Remote cover	1251770
6	Secondary diaphragm (N-V-T)	TKISM025N Neoprene TKISM025V Viton TKISM025T Low temperature
6a	Diaphragm spring	3241002
7	Screws - Washers	TKITVTE10X25X6
8	Cover	1251660
9	Diaphragm spring	3241024
10	Primary Diaphragm (N-V-T)	TKISM0100N Neoprene TKISM0100V Viton TKISM0100T Low temperature

V## / V## = 24 Vdc - 24 Vac - 115 Vac - 230 Vac

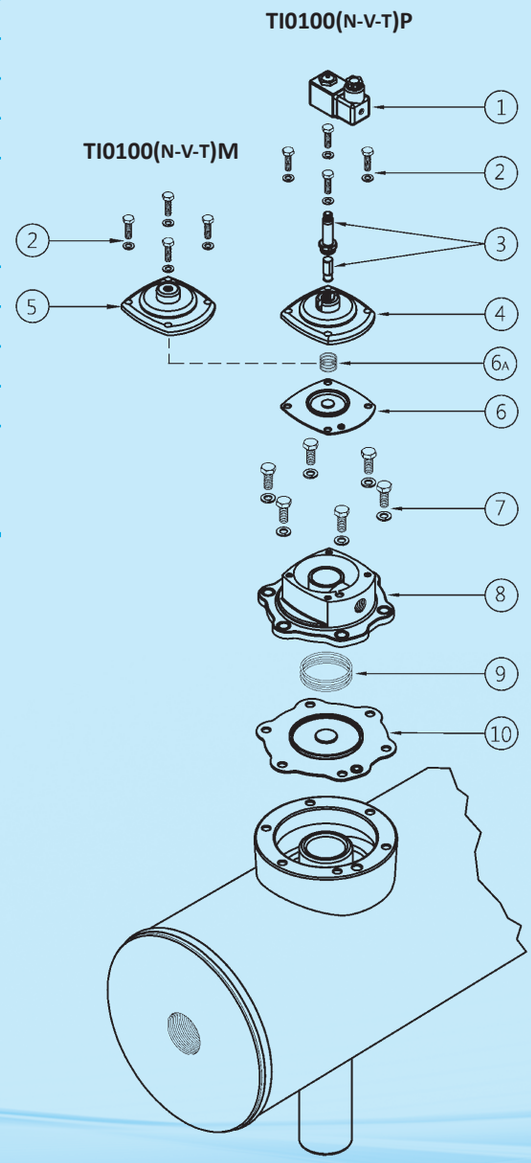

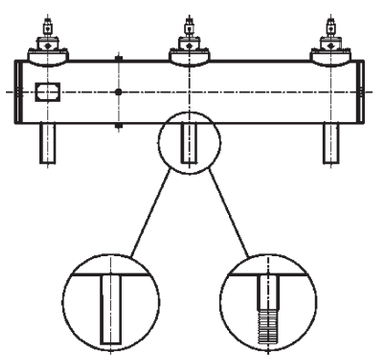

The customer is responsible for the size and type of outlet pipe

Cat_Turbo_2018_Serbatoi_EN.indd 36 16/01/19 12:01

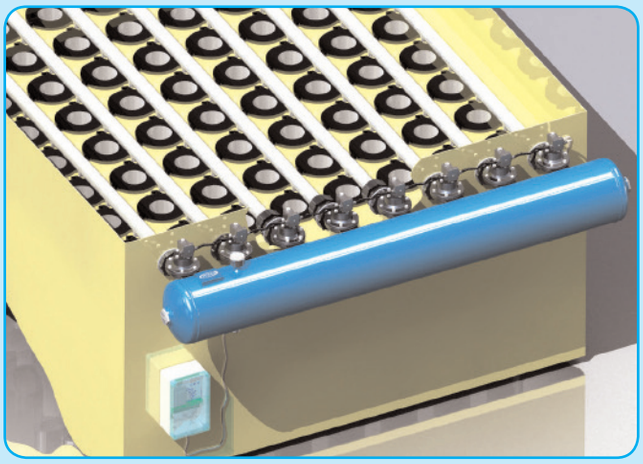

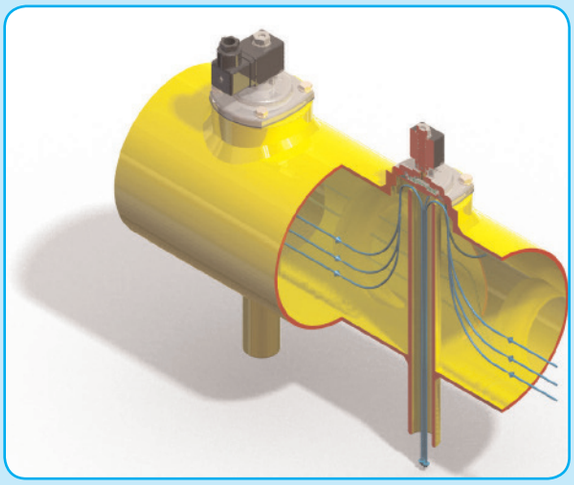

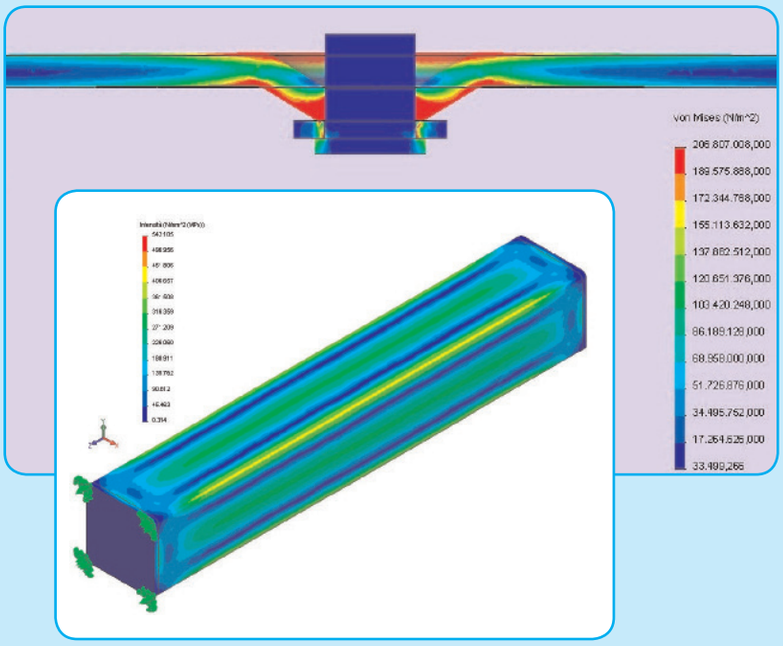

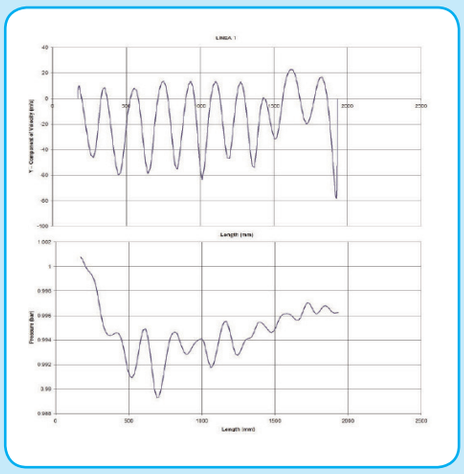

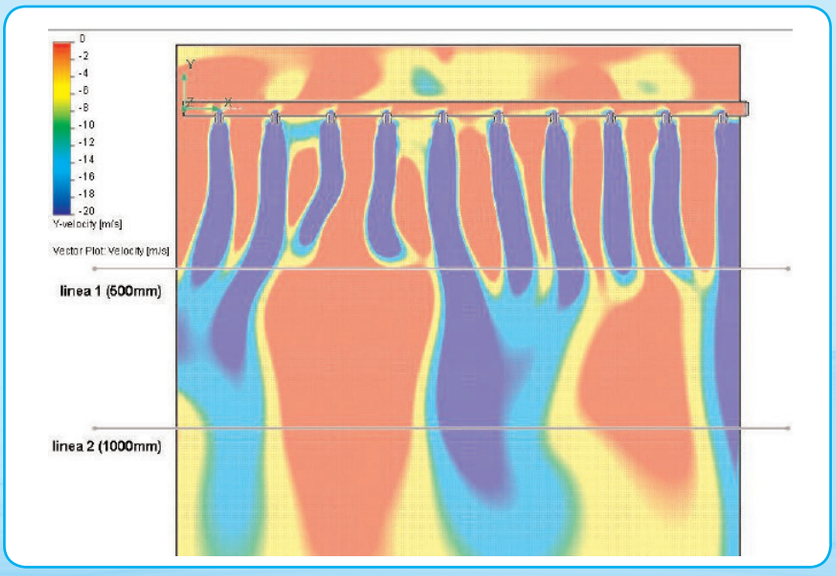

Cat_Turbo_2018_Serbatoi_EN.indd 37 16/01/19 12:01

5” - 6” - 8” - 10” - 12” - 14” DN TF SERIES

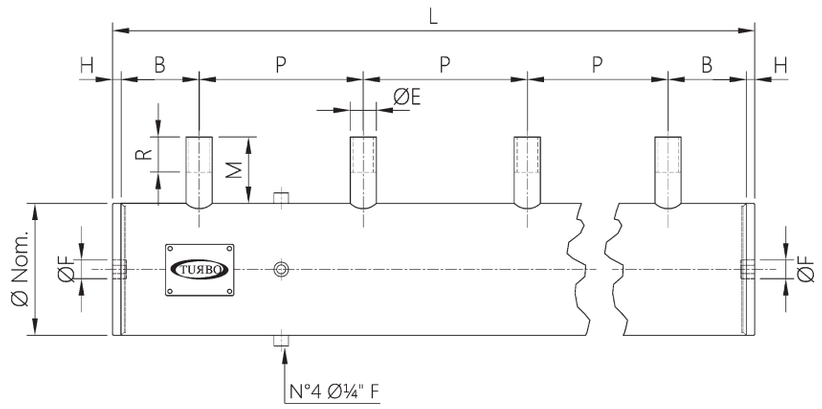

L = Px(N-1)+2A+2B P = Distance between the valves N = Number of valves

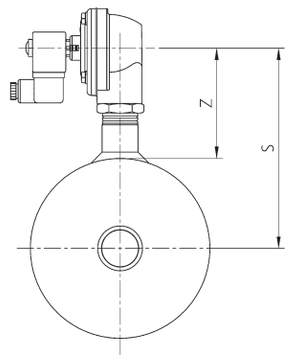

For special versions of P min and B min, please contact our technical department

Ø (Nom.)	Ø(out) mm	ØE	B(min)	ØF	H	M	R	Z(±)	S(±)	P(min)
5”	141.3	¾ ”	45	1”	10	85	40	120	190	85
5”	141.3	1”	45	1”	10	85	40	120	190	85
6”	168.3	¾ ”	45	1”	10	85	40	120	204	85
6”	168.3	1”	45	1”	10	85	40	120	204	85
6”	168.3	1 ½"	55	1”	10	85	40	136	220	150
8”	219.1	1”	45	1 ½"	10	85	40	120	229	85
8”	219.1	1 ½"	55	1 ½"	10	85	40	136	245	150
8”	219.1	2”	60	1 ½"	10	75	40	164	273	210
10”	273	1 ½"	55	1 ½"	12	85	40	136	272	150
10”	273	2”	60	1 ½"	12	75	40	164	300	210
10”	273	2 ½"	70	1 ½"	12	70	45	164	300	210
12”	324	2”	60	2”	20	75	40	164	325	210
12”	324	2 ½"	65	2”	20	75	40	164	325	210
14”	356	2 ½"	80	2”	25	70	45	164	342	210
14”	356	3”	110	2”	25	100	65	210	390	280

	DESCRIPTION	TF020(N-V-T)P / TF020(N-V-T)M	TF025(N-V-T)P / TF025(N-V-T)M
1	Coil + Connector	BH10 V## / V##	BH10 V## / V##
2	Screws + Washers	TKITVTE06X20X4	TKITVTE06X20X4
3	Pilot unit	1331080	1331080
4	Pilot cover	1251750	1251750
5	Remote cover	1251770	1251770
6	Diaphragm (N-V-T)	TKISM025N Neoprene TKISM025V Viton TKISM025T Low temperature	TKISM025N Neoprene TKISM025V Viton TKISM025T Low temperature
6a	Diaphragm spring	3241002	3241002
7	Valve body	1251120	1251190

V## / V## = 24 Vdc - 24 Vac - 115 Vac - 230 Vac

TF020(N-V-T)M
TF025(N-V-T)M

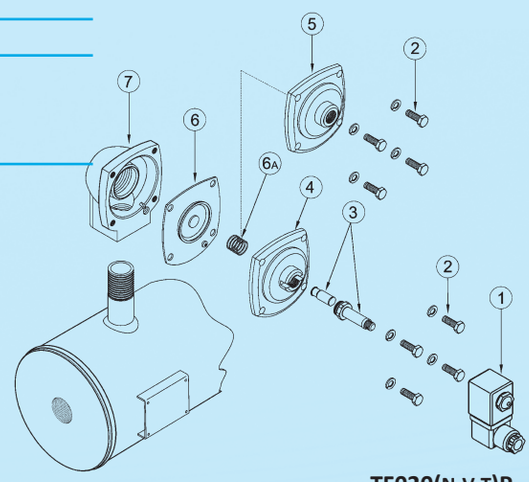

TF020(N-V-T)P
TF025(N-V-T)P

Cat_Turbo_2018_Serbatoi_EN.indd 38 16/01/19 12:01

5” - 6” - 8” - 10” - 12’’ - 14’’ DN TF SERIES

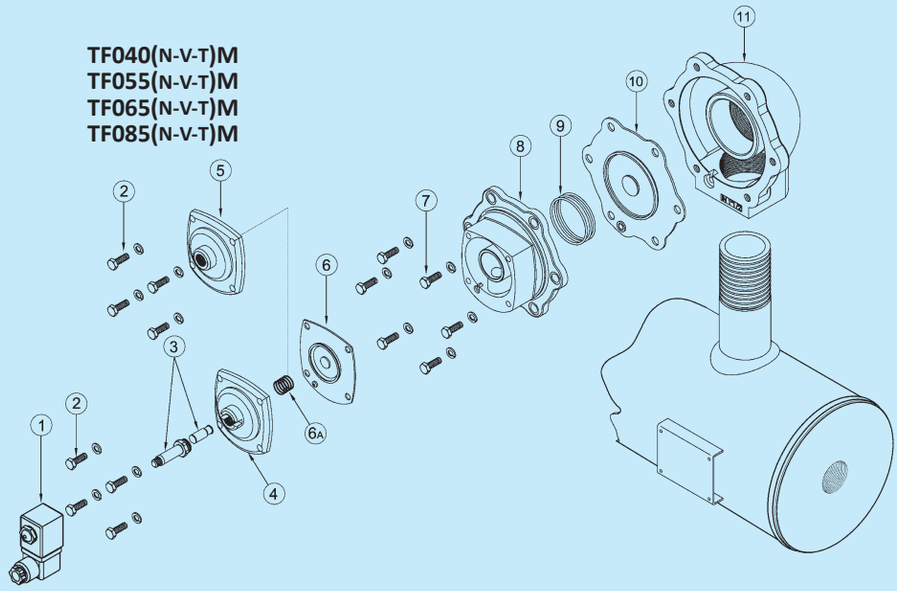

	DESCRIPTION	TF040(N-V-T)P TF040(N-V-T)M	TF055(N-V-T)P TF055(N-V-T)M	TF065(N-V-T)P TF065(N-V-T)M	TF085(N-V-T)P TF085(N-V-T)M
1	Coil + Connector	BH10 V## / V##	BH10 V## / V##	BH10 V## / V##	BH10 V## / V##
2	Screws + Washers	TKITVTE06X20X4	TKITVTE06X20X4	TKITVTE06X20X4	TKITVTE06X20X4
3	Pilot unit	1331080	1331080	1331080	1331080
4	Pilot cover	1251750	1251750	1251750	1251750
5	Remote cover	1251770	1251770	1251770	1251770
6	Secondary diaphragm (N-V-T)	TKISM025N Neoprene TKISM025V Viton TKISM025T Low temperature	TKISM025N Neoprene TKISM025V Viton TKISM025T Low temperature	TKISM025N Neoprene TKISM025V Viton TKISM025T Low temperature	TKISM025N Neoprene TKISM025V Viton TKISM025T Low temperature
6a	Diaphragm spring	3241002	3241002	3241002	3241002
7	Screws + Washers	TKITVTE08X20X6	TKITVTE10X25X6	TKITVTE10X25X6	TKITVTE10X30X8
8	Cover	1251620	1251660	1251660	1251680
9	Diaphragm spring	3241024	3241024	3241024	3241024
10	Primary diaphragm (N-V-T)	TKISM040N Neoprene TKISM040V Viton TKISM040T Low temperature	TKISM055N Neoprene TKISM055V Viton TKISM055T Low temperature	TKISM065N Neoprene TKISM065V Viton TKISM065T Low temperature	TKISM085N Neoprene TKISM085V Viton TKISM085T Low temperature
11	Valve body	1251400	1251470	1251500	1251570

	DESCRIPTION	TF045(N-V-T)P / TF045(N-V-T)M
1	Coil - Connector	BH10 V## / V##
2	Screws - Washers	TKITVTE06X18X4
3	Pilot unit	1331080
4	Pilot cover	1251715
5	Remote cover	1251745
6	Diaphragm spring	3241006
7	Secondary diaphragm (N-V-T)	TKISM010N Neoprene TKISM010V Viton TKISM010T Low temperature
8	Screws - Washers	TKITVTE08X20X6
9	Cover	1251840
10	Diaphragm spring	3241024
11	Primary Diaphragm (N-V-T)	TKISM045N Neoprene TKISM045V Viton TKISM045T Low temperature
12	Valve body	1251400

V## / V## = 24 Vdc - 24 Vac - 115 Vac - 230 Vac

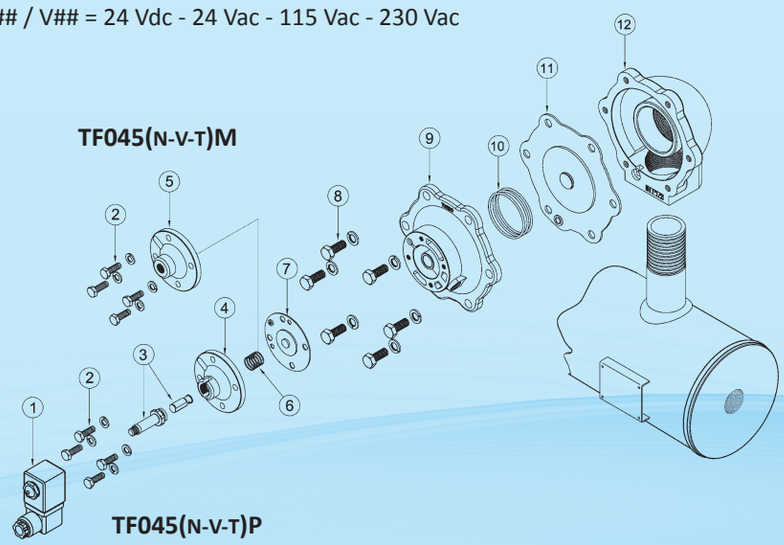

TFP version with built-in pilot / TFM version with remote pilot

6”- 8” TL SERIES

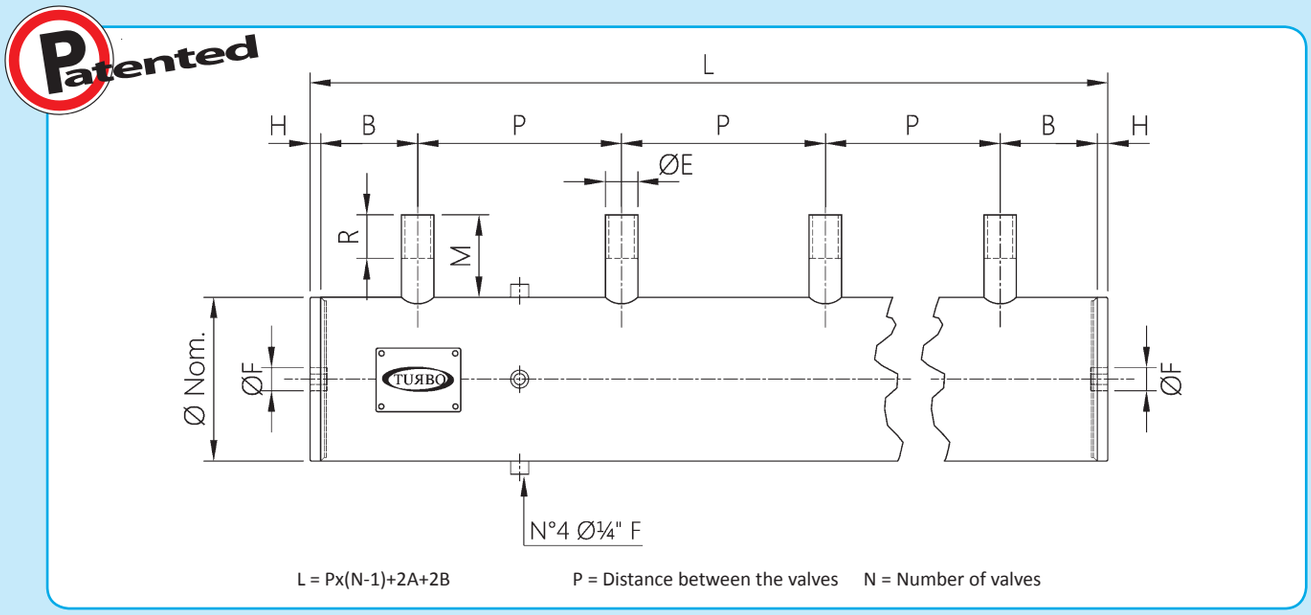

For special versions of P min and B min, please contact our technical department

Ø	Ø(out) mm	ØE	A	B(min)	ØF	H	M	R	Z(±)	S(±)	P(min)	Brackets
6”	168.3	1 ¼"	50	50	1”	10	45	30	139	223	85	S6-223
6”	168.3	2”	50	60	1”	10	45	30	180	265	120	S6-265
8”	219.1	2”	70	60	1 ½"	10	45	30	180	290	120	S8-290

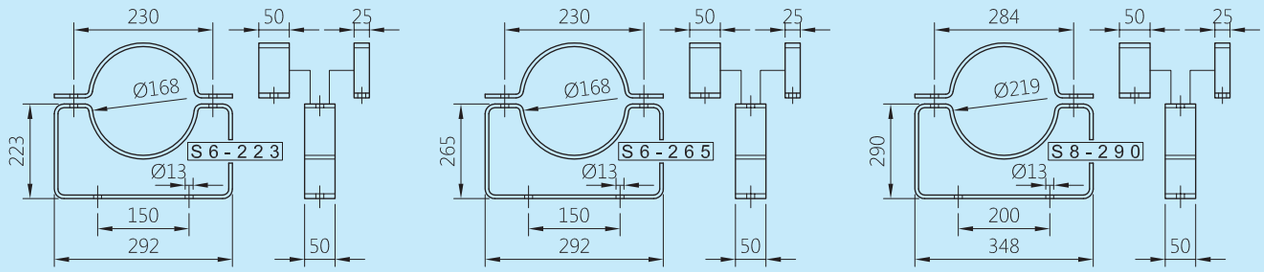

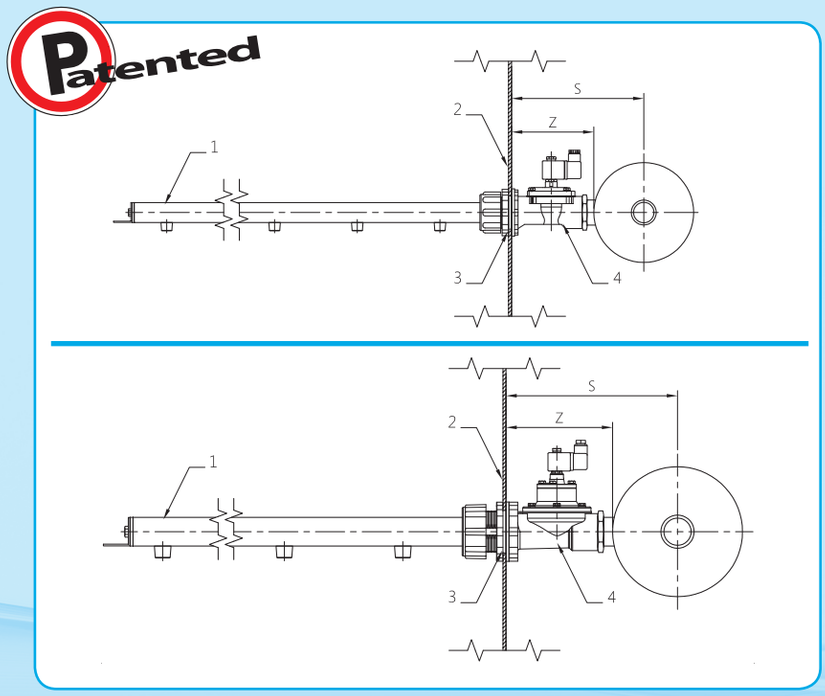

1. 1" AIR CANNON
2. FILTER WALL
3. ASSEMBLY HOLE MIN ø 56 mm
4. 1" STRAIGHT THROUGH VALVE

1. 1 ½" AIR CANNON
2. FILTER WALL
3. ASSEMBLY HOLE MIN ø 72 mm
4. 1½" STRAIGHT THROUGH VALVE

Cat_Turbo_2018_Serbatoi_EN.indd 40 16/01/19 12:01

TL SERIES / PART LIST

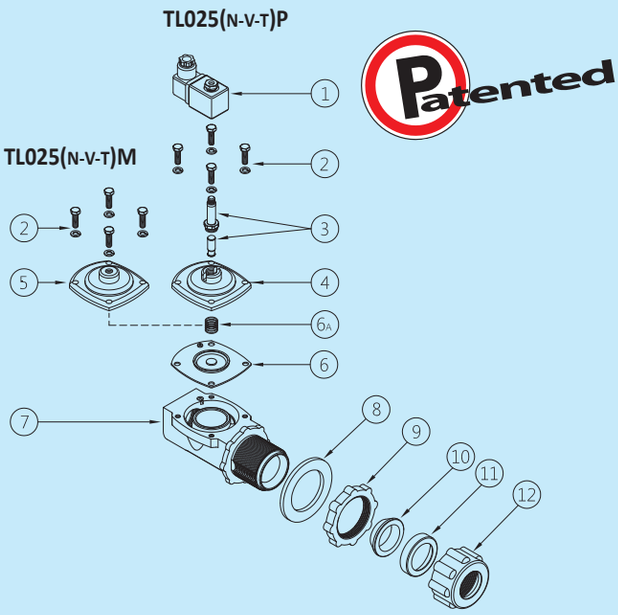

DESCRIPTION		TL025(N-V-T)P / TL025(N-V-T)M
1	Coil - Connector	BH10 V## / V##
2	Screws - Washers	TKITVTE06X20X4
3	Pilot unit	1331080
4	Pilot cover	1251750
5	Remote cover	1251770
6a	Diaphragm spring	3241002
6	Diaphragm (N-V-T)	TKISM010N Neoprene TKISM010V Viton TKISM010T Low temperature
7	Valve body	1251250
8	Seal	3141702
9	Lock nut	3181036
10	Conical seal	3301013
11	Retaining ring	1321010
12	Hose Clamp High Nut	1281045

DESCRIPTION		TL030(N-V-T)P / TL030(N-V-T)M
1	Coil - Connector	BH10 V## / V##
2	Screws - Washers	TKITVTE06X20X6
3	Pilot unit	1331080
4	Pilot cover	1251802
5	Remote cover	1251805
6a	Diaphragm spring	3241018
6	Diaphragm (N-V-T)	TKISM030N Neoprene TKISM030V Viton TKISM030T Low temperature
7	Valve body	1251330
8	Seal	3141706
9	Lock nut	3181032
10	Conical seal	3301017
11	Retaining ring	1321012
12	Hose Clamp High Nut	1281050

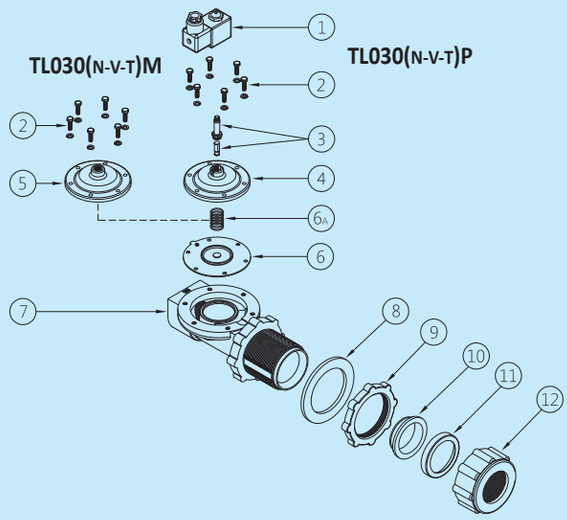

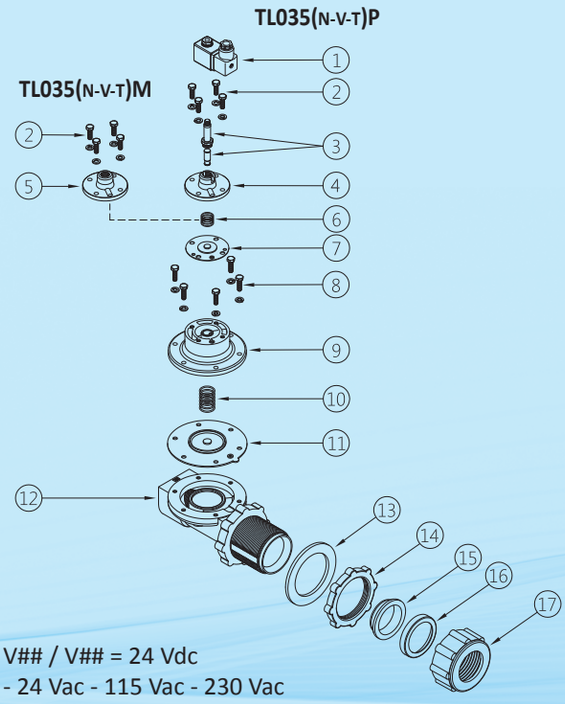

V## / V## = 24 Vdc
- 24 Vac - 115 Vac - 230 Vac

DESCRIPTION		TL035(N-V-T)P / TL035(N-V-T)M
1	Coil - Connector	BH10 V## / V##
2	Screws - Washers	TKITVTE06X18X4
3	Pilot unit	1331080
4	Pilot cover	1251720
5	Remote cover	1251740
6	Diaphragm spring	3241006
7	Secondary diaphragm (N-V-T)	TKISM010N Neoprene TKISM010V Viton TKISM010T Low temperature
8	Screws - Washers	TKITVTE06X20X6
9	Cover	1251810
10	Diaphragm spring	3241018
11	Primary Diaphragm (N-V-T)	TKISM035N Neoprene TKISM035V Viton TKISM035T Low temperature
12	Valve body	1251330
13	Seal	3141706
14	Lock nut	3181032
15	Conical seal	3301017
16	Retaining ring	1321012
17	Hose clamp high nut	1281050

5” - 6” - 8’’ - 10’’ DN TD SERIES

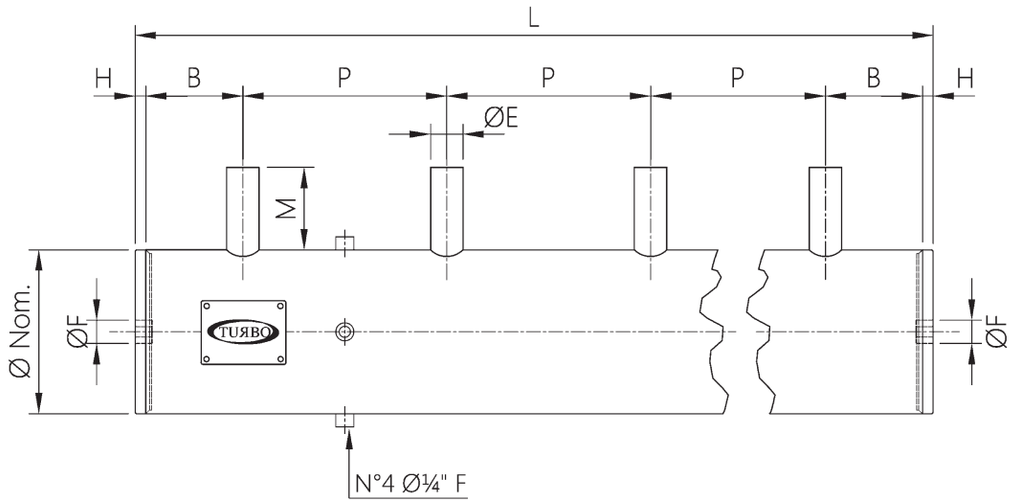

L = Px(N-1)+2A+2B P = Distance between the valves N = Number of valves

For special versions of P min and B min, please contact our technical department

Ø (NOM)	Ø(out) mm	ØE	A	B(min)	ØF	H	M	Z(±)	S(±)	P(min)
5”	141.3	¾”	50	45	1”	10	85	130	200	85
5”	141.3	1”	50	45	1”	10	85	130	200	85
6”	168.3	¾”	50	45	1”	10	85	130	215	85
6”	168.3	1”	50	45	1”	10	85	130	215	85
6”	168.3	1 ½"	50	55	1”	10	85	138	223	150
8”	219.1	1”	70	45	1 ½"	10	85	130	240	85
8”	219.1	1 ½"	70	55	1 ½"	10	85	138	248	150
10”	273	1 ½"	90	55	1 ½"	12	85	138	275	150

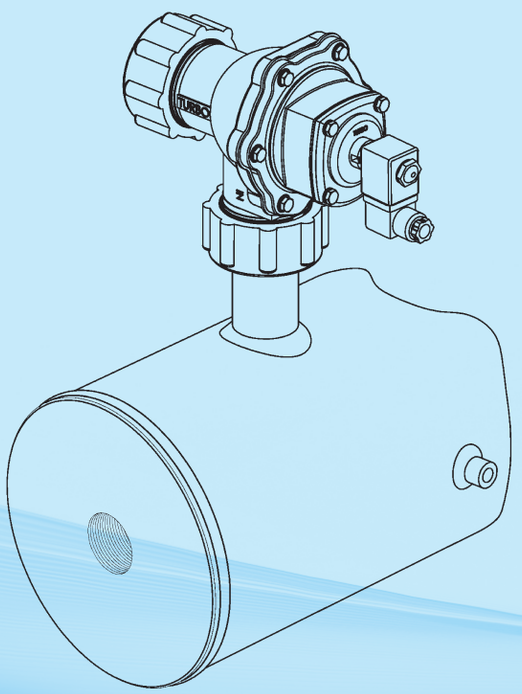

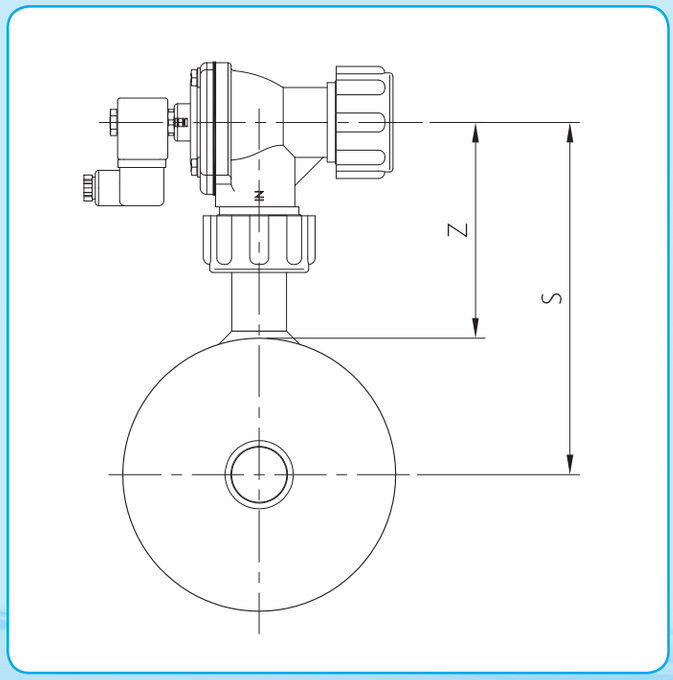

Cat_Turbo_2018_Serbatoi_EN.indd 42 16/01/19 12:02

5” - 6” - 8” - 10” DN TD SERIES

	DESCRIPTION	TD020(N-V-T)P / TD020(N-V-T)M	TD025(N-V-T)P / TD025(N-V-T)M
1	Coil - Connector	BH10 V## / V##	BH10 V## / V##
2	Screws - Washers	TKITVTE06X18X4	TKITVTE06X18X4
3	Pilot unit	1331080	1331080
4	Pilot cover	1251750	1251750
5	Remote cover	1251770	1251770
6	Diaphragm (N-V-T)	TKISM025N Neoprene TKISM025V Viton TKISM025T Low temperature	TKISM025N Neoprene TKISM025V Viton TKISM025T Low temperature
6a	Diaphragm spring	3241002	3241002
7	Valve body	1251110	1251310
8	Conical seal	3301010	3301013
9	Retaining ring	1321006	1321010
10	Hose clamp high nut	1281040	1281045

V## / V## = 24 Vdc - 24 Vac - 115 Vac - 230 Vac

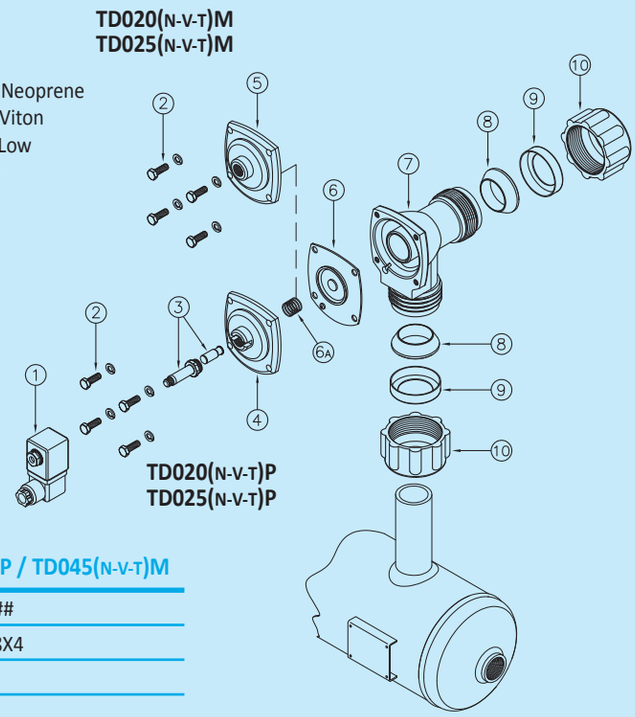

	DESCRIPTION	TD040(N-V-T)P / TL040(N-V-T)M	TD045(N-V-T)P / TD045(N-V-T)M
1	Coil - Connector	BH10 V## / V##	BH10 V## / V##
2	Screws - Washers	TKITVTE06X20X4	TKITVTE06X18X4
3	Pilot unit	1331080	1331080
4	Pilot cover	1251750	1251715
5	Remote cover	1251770	1251745
6	Secondary diaphragm (N-V-T)	TKISM025N Neoprene TKISM025V Viton TKISM025T Low temperature	TKISM010N Neoprene TKISM010V Viton TKISM010T Low temperature
6a	Diaphragm spring	3241002	3241006
7	Screws - Washers	TKITVTE08X20X6	TKITVTE08X20X6
8	Cover	1251620	1251620
9	Diaphragm spring	3241002	3241024
10	Primary Diaphragm (N-V-T)	TKISM040N Neoprene TKISM040V Viton TKISM040T Low temperature	TKISM045N Neoprene TKISM045V Viton TKISM045T Low temperature
11	Valve body	1251440	1251440
12	Conical seal	3301017	3301017
13	Retaining ring	1321012	1321012
14	Hose clamp high nut	1281050	1281050

V## / V## = 24 Vdc - 24 Vac - 115 Vac - 230 Vac

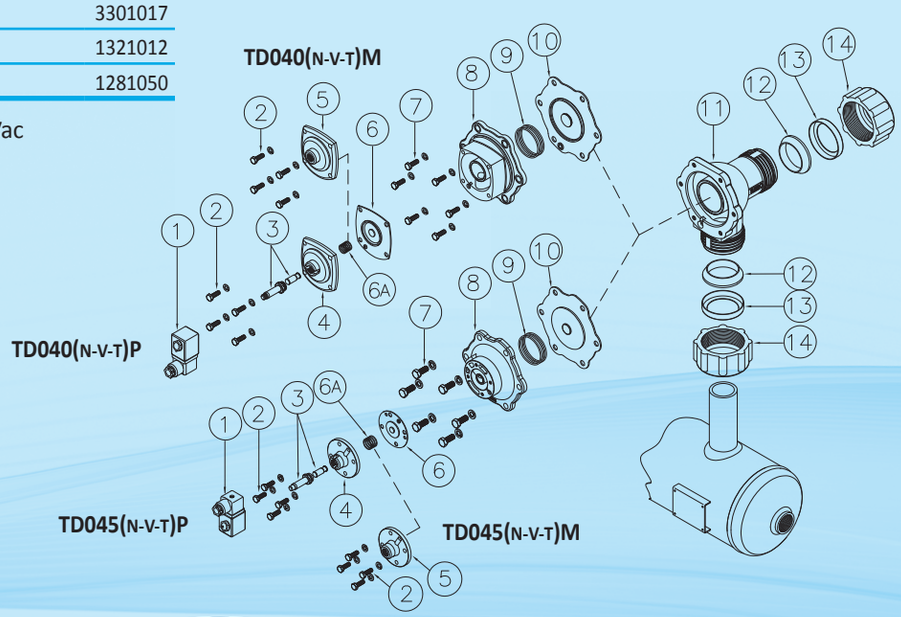

XTF SERIES DN 5” - 6” - 8” - 10” - WITH THREADED STUMPS

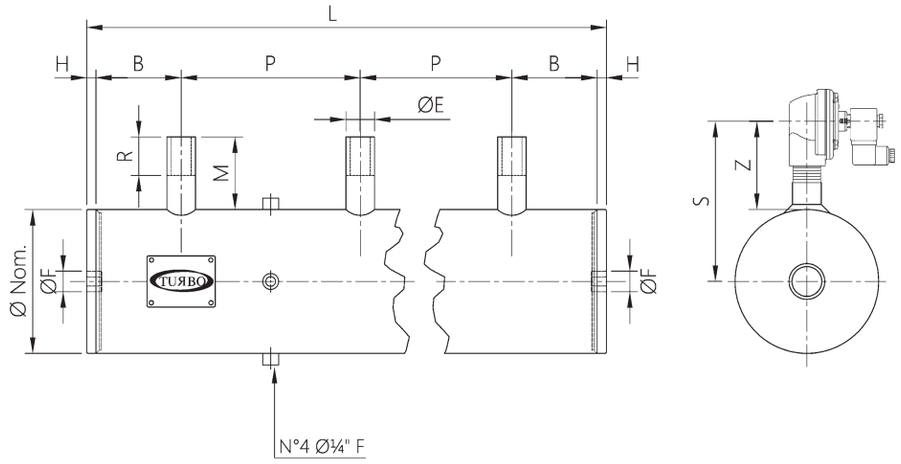

L = Px(N-1)+2A+2B P = Distance between valves N = Number of valves

For special versions of P min and B min, please contact our technical department

Ø (NOM)	Ø(out) mm	ØE	B(min)	ØF	H	M	R	Z(±)	S(±)	P(min)
5”	140	¾”	40	1”	10	85	40	120	190	85
5”	140	1”	45	1”	10	85	40	120	190	85
5”	140	1 ½"	50	1”	10	85	40	120	205	150
6”	168.3	¾”	40	1”	10	85	40	120	204	85
6”	168.3	1”	45	1”	10	85	40	120	204	85
6”	168.3	1 ½"	55	1”	10	85	40	136	220	150
6”	168.3	2”	60	1”	10	75	40	164	248	210
8”	219.1	1”	45	1 ½"	10	85	40	120	229	85
8”	219.1	1 ½"	55	1 ½"	10	85	40	136	245	150
8”	219.1	2”	60	1 ½"	10	75	40	164	273	210
8”	219.1	2 ½"	65	1 ½"	10	85	40	164	273	210
10”	273	1 ½"	55	1 ½"	12	85	40	136	272	150
10”	273	2”	60	1 ½"	12	75	40	164	300	210
10”	273	2 ½"	70	1 ½"	12	70	45	164	300	210

Operating temperature: -50°C/+200°C

5” - 6” - 8” - 10” DN INX INTEGRAL SERIES - GLOBAL IMMERSION HEADER TANKS

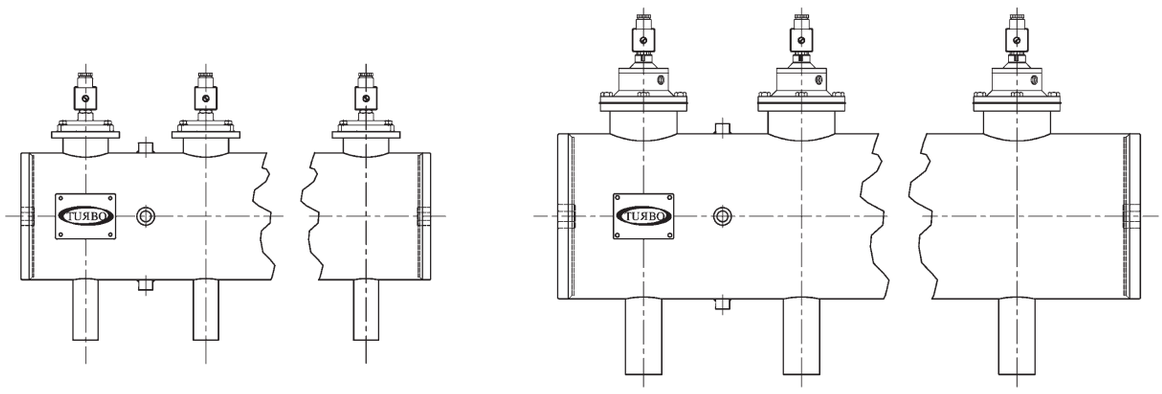

Please contact our technical department for the dimensions
Operating temperature: -50°C/+200°C

Cat_Turbo_2018_Serbatoi_EN.indd 44 16/01/19 12:02

RANGE

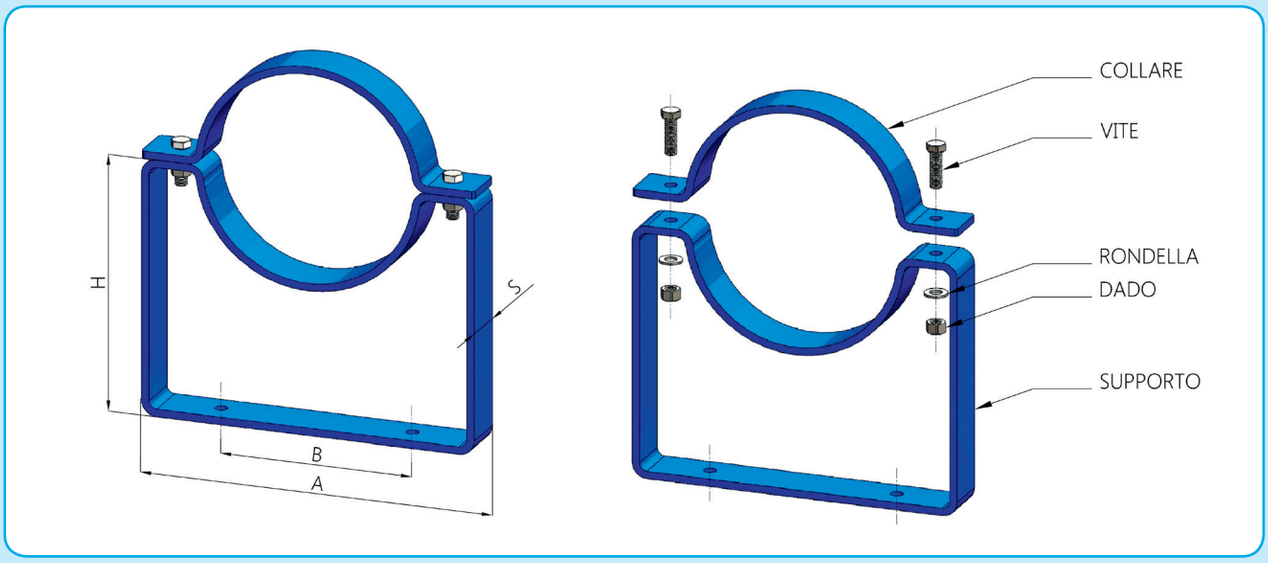

TANK DIAMETER	BRACKET MODEL	BRACKET CODE	A (mm)	B (mm)	H mm	S (mm)	Weight (kg)
5” (Ø 141.3)	Low bracket	SB5	264	150	95	50	2.6
	Medium bracket	SM5	264	150	160	50	3.0
	High bracket	SA5	264	150	180	50	3.1
6” (Ø 168.3)	Low bracket	SB6	292	150	109	50	2.8
	Medium bracket	SM6	292	150	170	50	3.3
	High bracket	SA6	292	150	200	50	3.5
	TL series bracket	S6 - 223	292	150	223	50	3.7
	TL series bracket	S6 - 265	292	150	265	50	4.0
8” (Ø 219.1)	Low bracket	SB8	348	200	134	50	4.6
	Medium bracket	SM8	348	200	210	50	5.0
	High bracket	SA8	348	200	270	50	5.4
	TL series bracket	S8 - 290	348	200	290	50	5.5
10” (Ø 273)	Low bracket	SB10	424	250	161	50	5.6
	High bracket	SA10	424	250	273	50	6.5

For special brackets, please contact our technical department

U-BOLTS

TANK DIAMETER	ØA (mm)	B (mm)	C (mm)	D (mm)	E (mm)
4” (Ø 114.3)	115	87.5	45	124	M10
5” (Ø 141.3)	155	92.5	45	164	M10
6” (Ø 168.3)	175	116.5	45	185	M16
8” (Ø 219.1)	225	141.5	45	235	M16

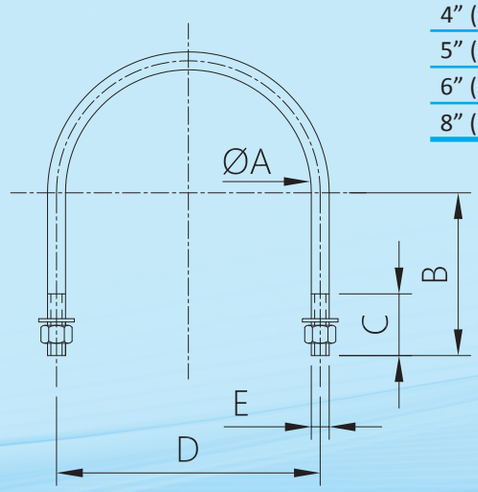

U-Bolts are available in galvanised steel or stainless steel, on request

6” ALUTANK SERIES WITH 1” DN VALVES

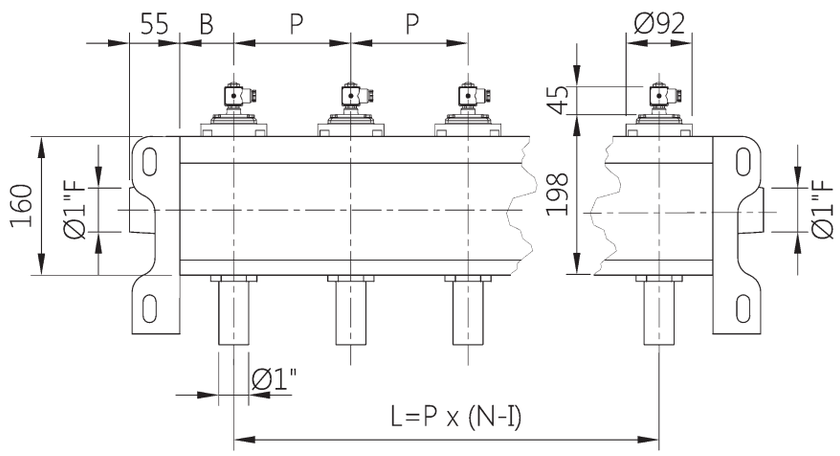

6 bar PRESSURE	B min.= 51	P min.= 92
8 bar PRESSURE	B min.= 61	P min.= 121

For special versions of P min and B min, please contact our technical department

TECHNICAL FEATURES

Tank body
Extruded anodised aluminium

Ends
Die-cast aluminium

Air cannons
Galvanised steel

O-Ring
NBR

Operating temperature
-20°C +80°C

Operating pressure
0.5 ÷ 6 bar - 0.5 ÷ 8 bar

Low temperature version
- 40°C +80°C

(Aluminium air cannons)

DESCRIPTION		TS025(N-V-T)P / TS025(N-V-T)M
1	Coil - Connector	BH10 V## / V##
2	Screws - Washers	TKITVTE06X20X4
3	Pilot unit	1331080
4	Pilot cover	1251750
5	Remote cover	1251770
6	Diaphragm (N-V-T)	TKISM025N Neoprene TKISM025V Viton TKISM025T Low temperature
6a	Diaphragm spring	3241002
7	Screws - Washers	TKITVTE06X16X4
8	Valve body	1251300
9	O-R gasket	3301285

V## / V## = 24 Vdc - 24 Vac - 115 Vac - 230 Vac

TS025(N-V-T)P

TS025(N-V-T)M

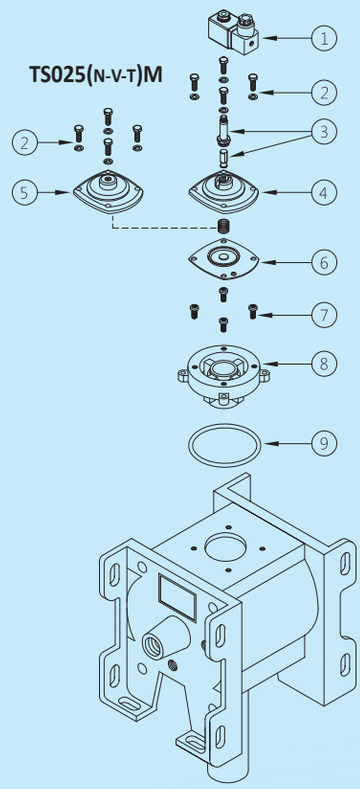

DETAIL OF BOTTOM DIMENSIONS AND FIXING

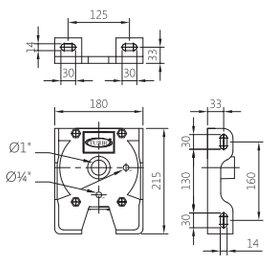

STANDARD

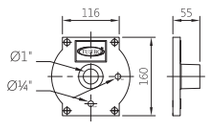

WITHOUT BRACKETS

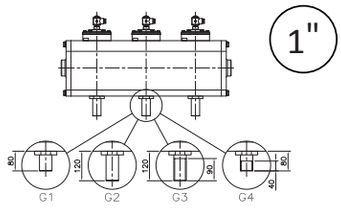

SHORT PLAIN OUTLET PIPE = G1
LONG PLAIN OUTLET PIPE = G2
LONG THREADED OUTLET PIPE = G3
SHORT THREADED OUTLET PIPE = G4

Cat_Turbo_2018_Serbatoi_EN.indd 46 16/01/19 12:02

6" ALUTANK SERIES WITH 1½" DN VALVES

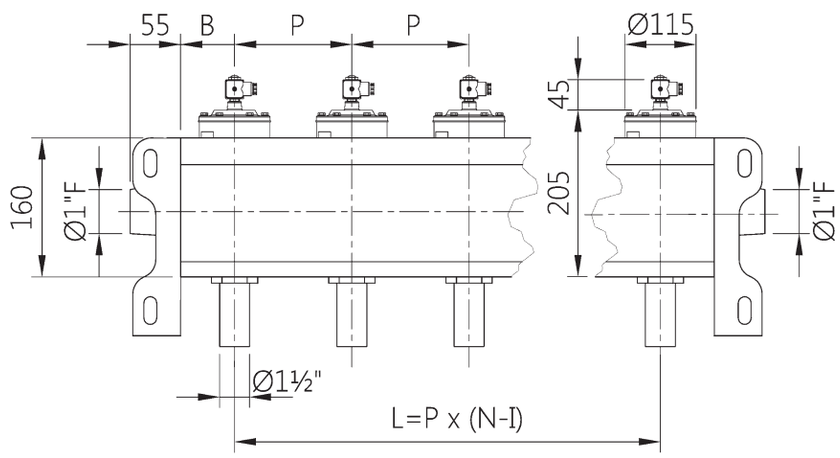

6 bar PRESSURE	B min.= 58	P min.= 115
8 bar PRESSURE	B min.= 73	P min.= 145

For special versions of P min and B min, please contact our technical department

TECHNICAL FEATURES

Tank body Extruded anodised aluminium
Ends Die-cast aluminium
Air cannons Galvanised steel
O-Ring NBR
Operating temperature -20°C +80°C
Operating pressure 0.5 ÷ 6 bar - 0.5 ÷ 8 bar
Low temperature version - 40°C +80°C (Aluminium air cannons)

DESCRIPTION		TS030(N-V-T)P / TS030(N-V-T)M
1	Coil - Connector	BH10 V## / V##
2	Screws - Washers	TKITVTE06X20X6
3	Pilot unit	1331080
4	Pilot cover	1251802
5	Remote cover	1251805
6	Diaphragm spring	3241018
7	Diaphragm (N-V-T)	TKISM030N Neoprene TKISM030V Viton TKISM030T Low temperature
8	Screws - Washers	TKITVTE06X20X2
9	Valve body	1251350
10	O-R gasket	3301276

V## / V## = 24 Vdc - 24 Vac - 115 Vac - 230 Vac

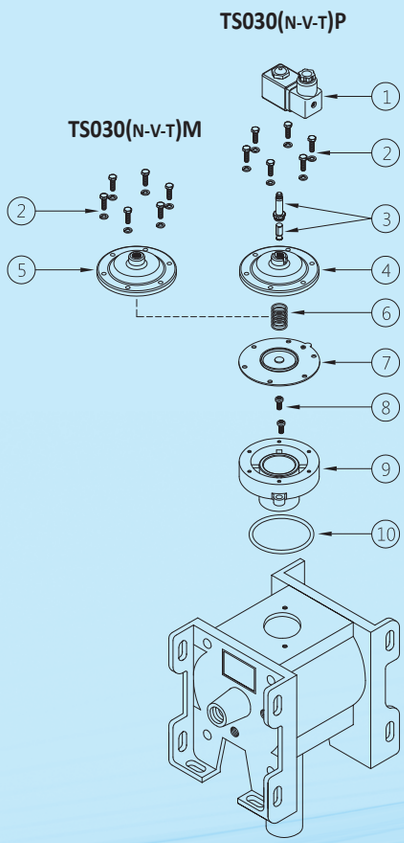

DETAIL OF BOTTOM DIMENSIONS AND FIXING

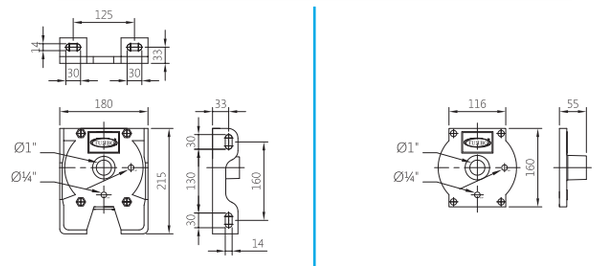

STANDARD

WITHOUT BRACKETS

SHORT PLAIN OUTLET PIPE = G1
LONG PLAIN OUTLET PIPE = G2
LONG THREADED OUTLET PIPE = G3
SHORT THREADED OUTLET PIPE = G4

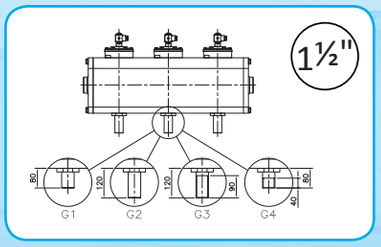

6" ALUTANK SERIES WITH 1½" DN VALVES

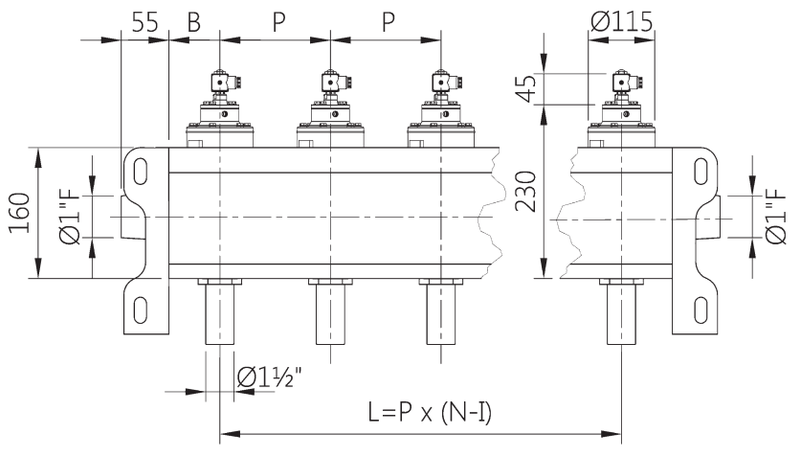

6 bar PRESSURE	B min.= 58	P min.= 115
8 bar PRESSURE	B min.= 73	P min.= 145

TECHNICAL FEATURES

Tank body Extruded anodised aluminium
Ends Die-cast aluminium
Air cannons Galvanised steel
O-Ring NBR
Operating temperature -20°C +80°C
Operating pressure 0.5 ÷ 6 bar - 0.5 ÷ 8 bar
Low temperature version - 40°C +80°C (Aluminium air cannons)

For special versions of P min and B min, please contact our technical department

DESCRIPTION		TS035(N-V-T)P / TS035(N-V-T)M
1	Coil - Connector	BH10 V## / V##
2	Screws - Washers	TKITVTE06X18X4
3	Pilot unit	1331080
4	Pilot cover	1251720
5	Remote cover	1251740
6	Diaphragm spring	3241006
7	Secondary diaphragm (N-V-T)	TKISM010N Neoprene TKISM010V Viton TKISM010T Low temperature
8	Screws - Washers	TKITVTE06X20X6
9	Cover	1251810
10	Diaphragm spring	3241018
11	Primary Diaphragm (N-V-T)	TKISM035N Neoprene TKISM035V Viton TKISM035T Low temperature
12	Screws - Washers	TKITVTE08X20X2
13	Valve body	1251370
14	O-R gasket	3301276

V## / V## = 24 Vdc - 24 Vac - 115 Vac - 230 Vac

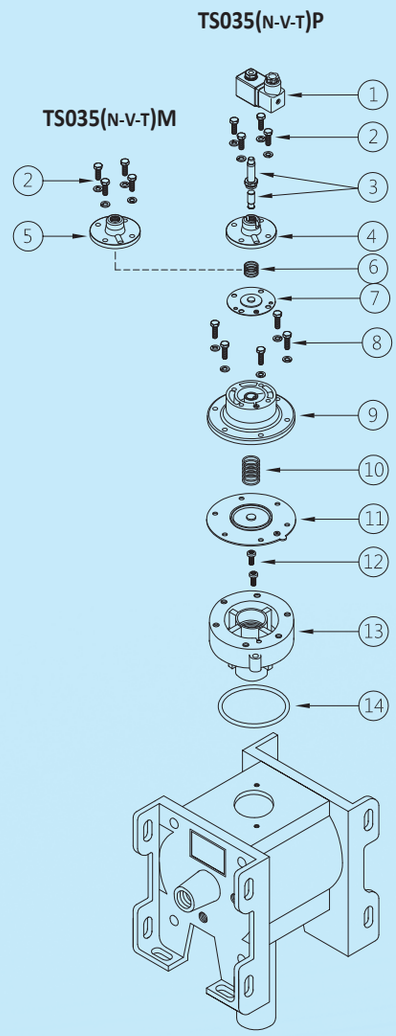

DETAIL OF BOTTOM DIMENSIONS AND FIXING

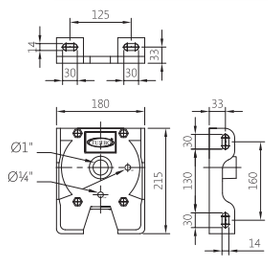

STANDARD

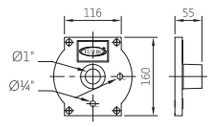

WITHOUT BRACKETS

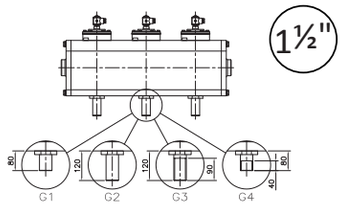

SHORT PLAIN OUTLET PIPE = G1
LONG PLAIN OUTLET PIPE = G2
LONG THREADED OUTLET PIPE = G3
SHORT THREADED OUTLET PIPE = G4

Cat_Turbo_2018_Serbatoi_EN.indd 48 16/01/19 12:02

8” ALUTANK SERIES WITH 1” DN VALVES

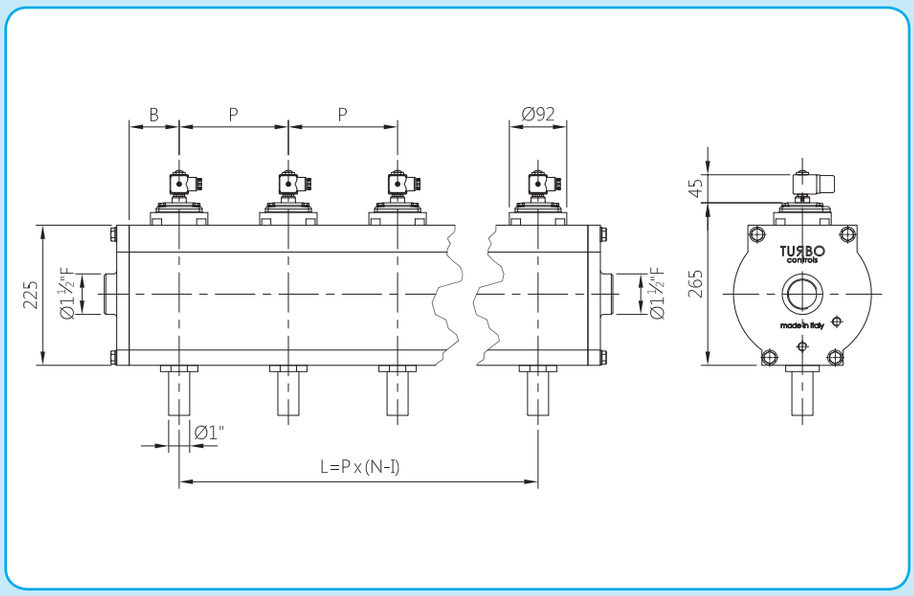

TECHNICAL FEATURES

Tank body Extruded anodised aluminium
Ends Die-cast aluminium
Air cannons Galvanised steel
O-Ring NBR
Operating temperature -20°C +80°C
Operating pressure 0.5 ÷ 6 bar - 0.5 ÷ 8 bar
Low temperature version - 40°C +80°C (Aluminium air cannons)

Please contact our technical department for P min and B min values

DESCRIPTION		TS025(N-V-T)P / TS025(N-V-T)M
1	Coil - Connector	BH10 V## / V##
2	Screws - Washers	TKITVTE06X20X4
3	Pilot unit	1331080
4	Pilot cover	1251750
5	Remote cover	1251770
6a	Diaphragm spring	3241002
6	Diaphragm (N-V-T)	TKISM025N Neoprene TKISM025V Viton TKISM0250T Low temperature
7	Screws - Washers	TKITVTE06X16X4
8	Valve body	1251300
9	O-R gasket	3301285

V## / V## = 24 Vdc - 24 Vac - 115 Vac - 230 Vac

TS025(N-V-T)P

TS025(N-V-T)M

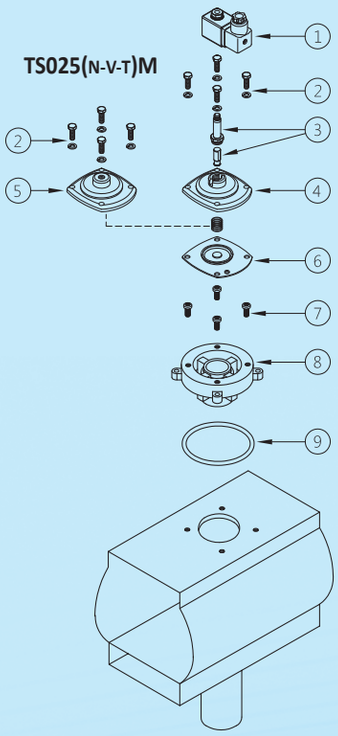

BOTTOM DIMENSIONS

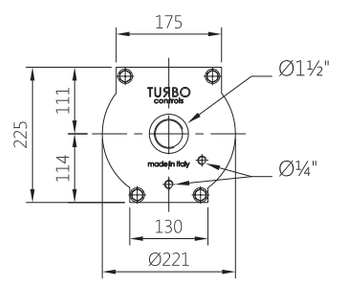

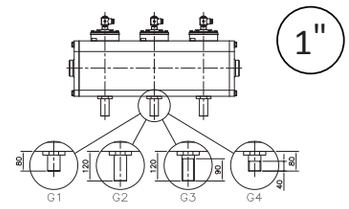

SHORT PLAIN OUTLET PIPE = G1
LONG PLAIN OUTLET PIPE = G2
LONG THREADED OUTLET PIPE = G3
SHORT THREADED OUTLET PIPE = G4

Cat_Turbo_2018_Serbatoi_EN.indd 49 16/01/19 12:02

8" ALUTANK SERIES WITH 1½" DN VALVES

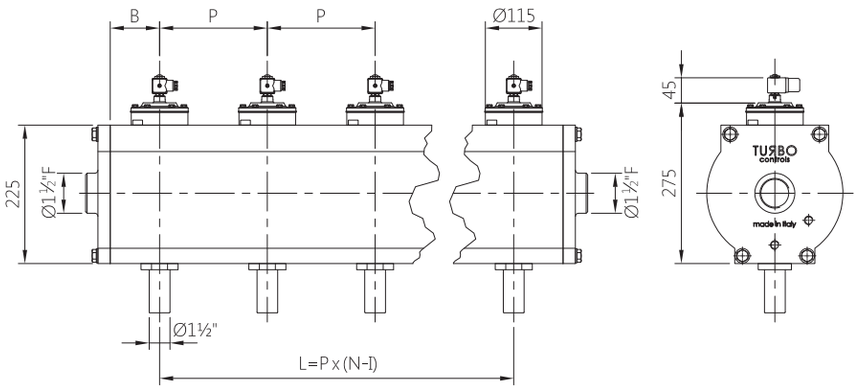

Please contact our technical department for P min and B min values

TECHNICAL FEATURES

Tank body
Extruded anodised aluminium

Ends
Die-cast aluminium

Air cannons
Galvanised steel

O-Ring
NBR

Operating temperature
-20°C +80°C

Operating pressure
0.5 ÷ 6 bar - 0.5 ÷ 8 bar

Low temperature version
- 40°C +80°C

(Aluminium air cannons)

DESCRIPTION		TS030(N-V-T)P / TS030(N-V-T)M
1	Coil - Connector	BH10 V## / V##
2	Screws - Washers	TKITVTE06X20X6
3	Pilot unit	1331080
4	Pilot cover	1251802
5	Remote cover	1251805
6	Diaphragm spring	3241018
7	Diaphragm (N-V-T)	TKISM030N Neoprene TKISM030V Viton TKISM030T Low temperature
8	Screws - Washers	TKITVTE06X20X2
9	Valve body	1251370
10	O-R gasket	3301276

V## / V## = 24 Vdc - 24 Vac - 115 Vac - 230 Vac

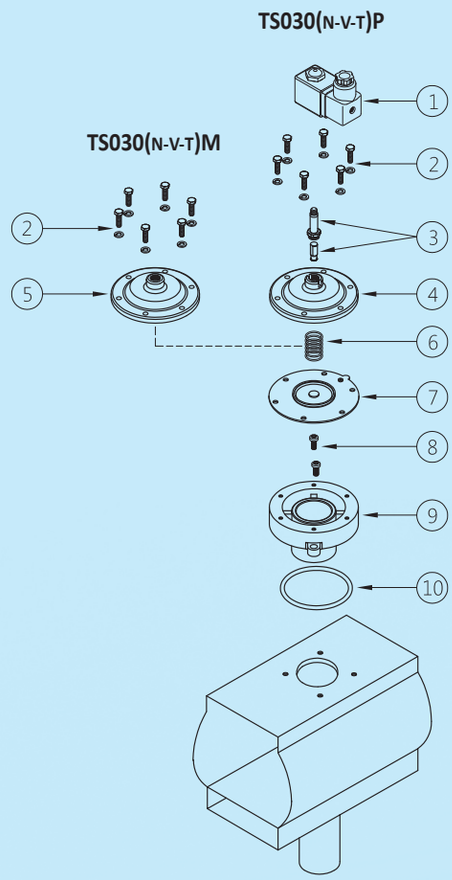

BOTTOM DIMENSIONS

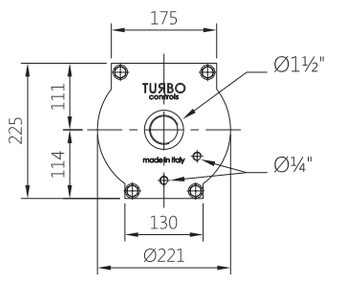

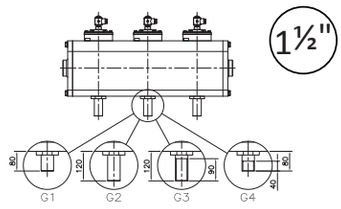

SHORT PLAIN OUTLET PIPE = G1
LONG PLAIN OUTLET PIPE = G2
LONG THREADED OUTLET PIPE = G3
SHORT THREADED OUTLET PIPE = G4

Cat_Turbo_2018_Serbatoi_EN.indd 50 16/01/19 12:02

8" ALUTANK SERIES WITH 1½" DN VALVES

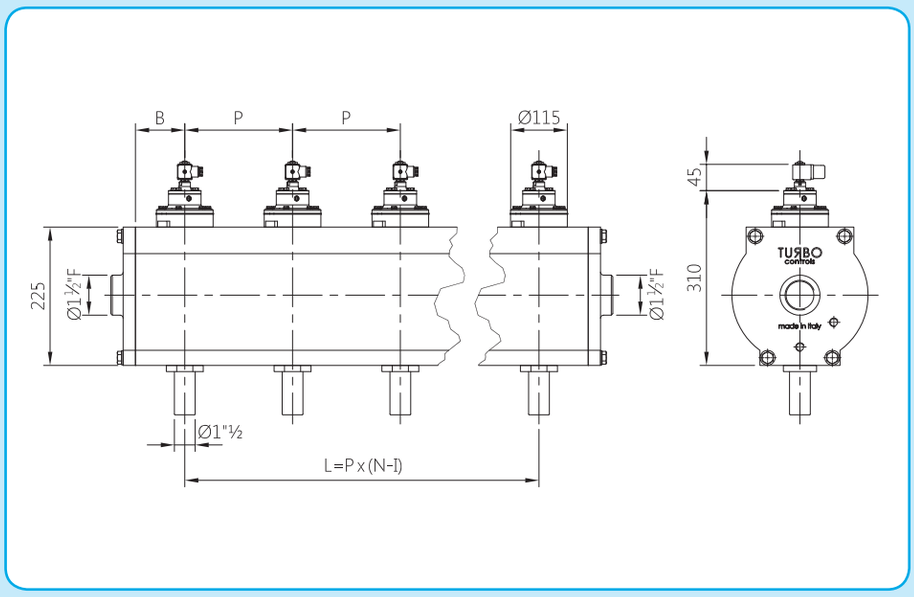

TECHNICAL FEATURES

Tank body Extruded anodised aluminium
Ends Die-cast aluminium
Air cannons Galvanised steel
O-Ring NBR
Operating temperature -20°C +80°C
Operating pressure 0.5 ÷ 6 bar - 0.5 ÷ 8 bar
Low temperature version - 40°C +80°C (Aluminium air cannons)

Please contact our technical department for P min and B min values

TS035(N-V-T)P

TS035(N-V-T)M

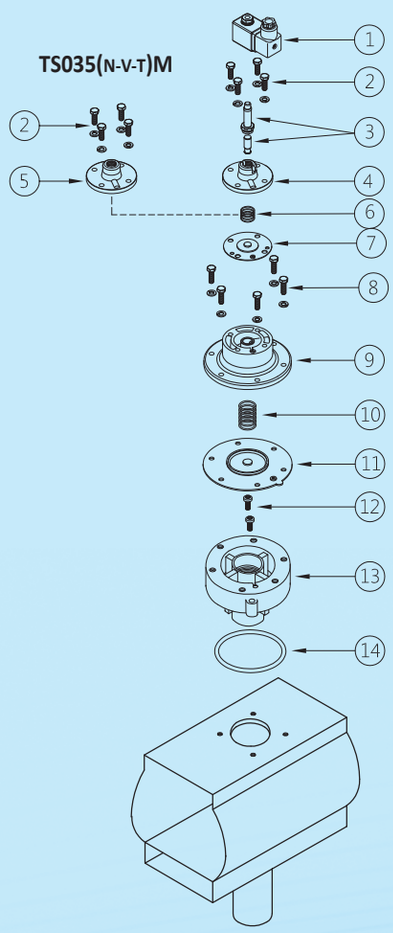

DESCRIPTION		TS035(N-V-T)P / TS035(N-V-T)M
1	Coil - Connector	BH10 V## / V##
2	Screws - Washers	TKITVTE06X18X4
3	Pilot unit	1331080
4	Pilot cover	1251720
5	Remote cover	1251740
6	Diaphragm spring	3241006
7	Secondary diaphragm (N-V-T)	TKISM010N Neoprene TKISM010V Viton TKISM010T Low temperature
8	Screws - Washers	TKITVTE06X20X6
9	Cover	1251810
10	Diaphragm spring	3241018
11	Primary Diaphragm (N-V-T)	TKISM035N Neoprene TKISM035V Viton TKISM035T Low temperature
12	Screws - Washers	TKITVTE08X20X2
13	Valve body	1251370
14	O-R gasket	3301276

V## / V## = 24 Vdc - 24 Vac - 115 Vac - 230 Vac

BOTTOM DIMENSIONS

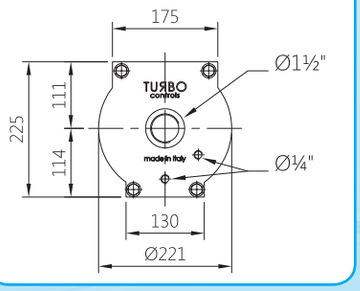

SHORT PLAIN OUTLET PIPE = G1
LONG PLAIN OUTLET PIPE = G2
LONG THREADED OUTLET PIPE = G3
SHORT THREADED OUTLET PIPE = G4

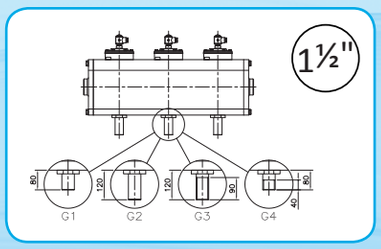

Cat_Turbo_2018_Serbatoi_EN.indd 51 16/01/19 12:02

8” ALUTANK SERIES WITH 2” DN VALVES

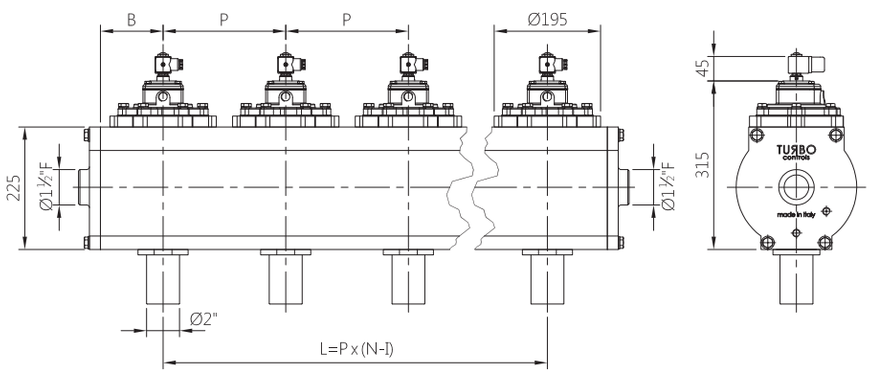

TECHNICAL FEATURES

Tank body
Extruded anodised aluminium

Ends
Die-cast aluminium

Air cannons
Galvanised steel

O-Ring
NBR

Operating temperature
-20°C +80°C

Operating pressure
0.5 ÷ 6 bar - 0.5 ÷ 8 bar

Low temperature version
- 40°C +80°C

(Aluminium air cannons)

Please contact our technical department for P min and B min values

DESCRIPTION		TS050(N-V-T)P / TS050(N-V-T)M
1	Coil - Connector	BH10 V## / V##
2	Screws - Washers	TKITVTE06X20X4
3	Pilot unit	1331080
4	Pilot cover	1251750
5	Remote cover	1251770
6a	Diaphragm spring	3241002
6	Secondary diaphragm (N-V-T)	TKISM025N Neoprene TKISM025V Viton TKISM025T Low temperature
7	Screws - Washers	TKITVTE10X25X6
8	Cover	1251650
9	Diaphragm spring	3241024
10	Primary Diaphragm (N-V-T)	TKISM050N Neoprene TKISM050V Viton TKISM050T Low temperature
11	Valve body	1251460
12	O-R gasket	3301203

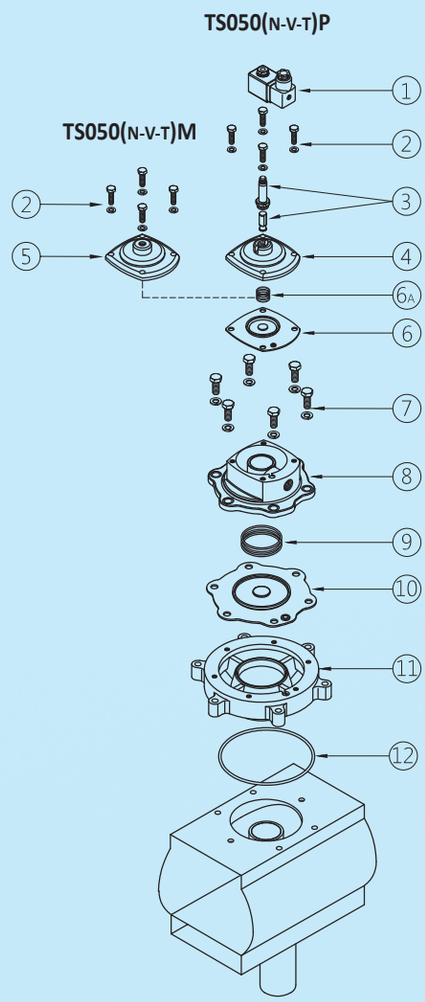

BOTTOM DIMENSIONS

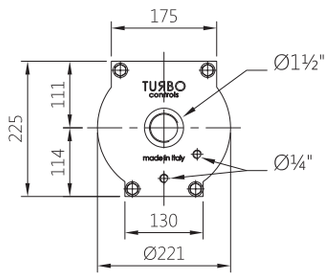

V## / V## = 24 Vdc
- 24 Vac - 115 Vac - 230 Vac

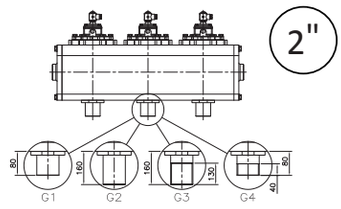

SHORT PLAIN OUTLET PIPE = G1
LONG PLAIN OUTLET PIPE = G2
LONG THREADED OUTLET PIPE = G3
SHORT THREADED OUTLET PIPE = G4

Cat_Turbo_2018_Serbatoi_EN.indd 52 16/01/19 12:02

6” ALUTANK SERIES WITH 1” DN VALVES

Patented

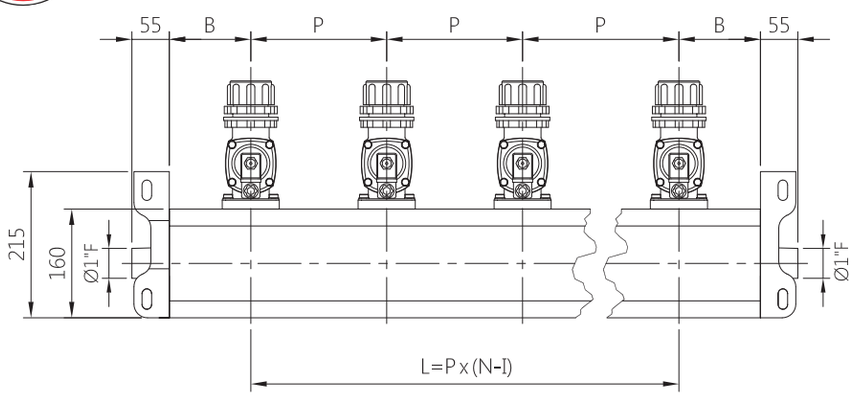

P min = 120 / B min = 70

For special versions of P min and B min, please contact our technical department

TECHNICAL FEATURES

Tank body Extruded anodised aluminium
Ends Aluminium
Air cannons Galvanised steel
O-Ring NBR
Operating temperature -20°C +80°C
Operating pressure 0.5 ÷ 6 bar - 0.5 ÷ 8 bar

N.B. configuration for low temperature - 40°C +80°C

DESCRIPTION		TM025(N-V-T)P / TM025(N-V-T)M
1	Coil - Connector	BH10 V## / V##
2	Screws - Washers	TKITVTE06X20X4
3	Pilot unit	1331080
4	Pilot cover	1251750
5	Remote cover	1251770
6a	Diaphragm spring	3241002
6	Diaphragm (N-V-T)	TKISM025N Neoprene TKISM025V Viton TKISM025T Low temperature
7	Valve body	1251180
8	O-R gasket	3301271
9	Screws - Washers	TKITVTE08X25X4
10	Seal	3141702
11	Lock nut	3181036
12	Conical seal	3301013
13	Retaining ring	1321010
14	Hose Clamp High Nut	1281045

V## / V## = 24 Vdc - 24 Vac - 115 Vac - 230 Vac

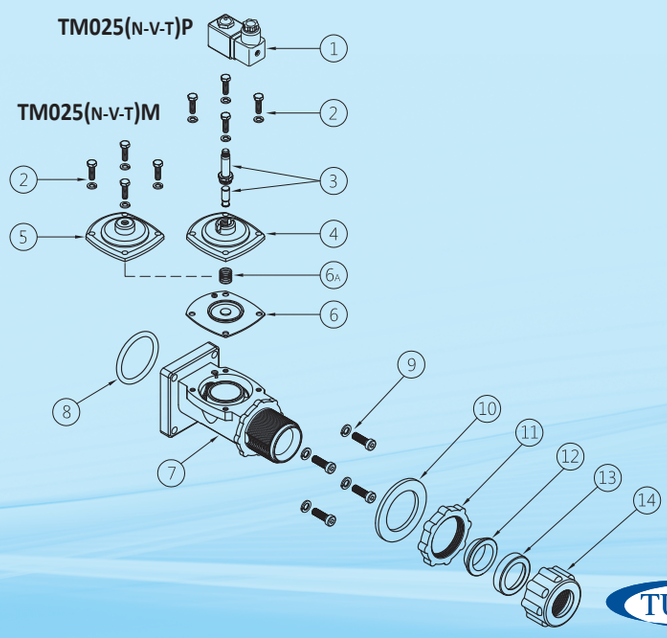

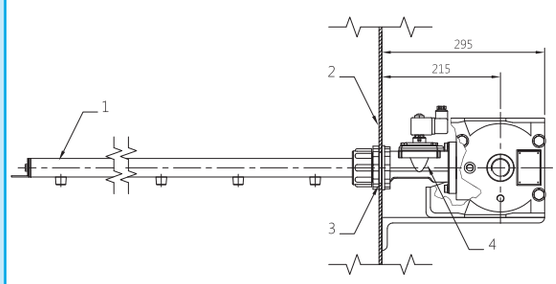

1. 1" AIR CANNON
2. FILTER WALL
3. HOLE ON WALL MIN ø 56 mm
4. 1" STRAIGHT THROUGH VALVE

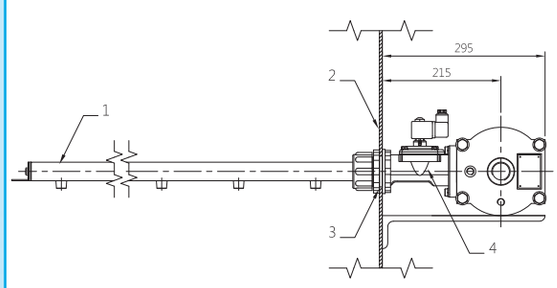

1. 1" AIR CANNON
2. FILTER WALL
3. HOLE ON WALL MIN ø 56 mm
4. 1" STRAIGHT THROUGH VALVE

Cat_Turbo_2018_Serbatoi_EN.indd 53 16/01/19 12:02

8” ALUTANK SERIES WITH 1” 1½ DN VALVES’

Patented

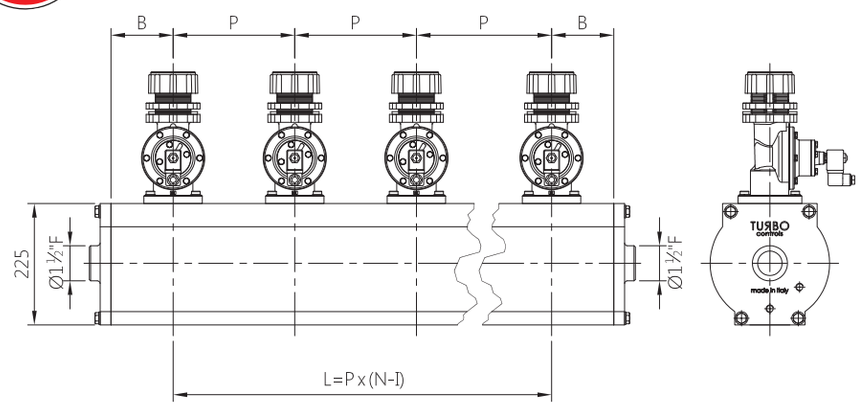

Please contact our technical department for P min and B min values

TECHNICAL FEATURES

Tank body
Extruded anodised aluminium

Ends
Aluminium

Air cannons
Galvanised steel

O-Ring
NBR

Operating temperature
-20°C +80°C

Operating pressure
0.5 ÷ 6 bar - 0.5 ÷ 8 bar

Configuration for low temperature - 40°C +80°C

1. 1" AIR CANNON
2. FILTER WALL
3. HOLE ON WALL MIN ø 56 mm
4. 1" STRAIGHT THROUGH VALVE

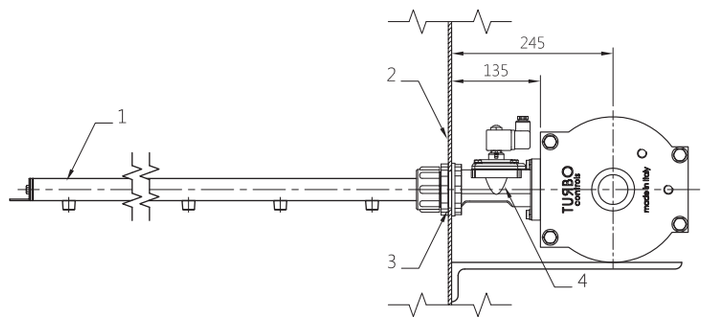

1. 1 ½" AIR CANNON
2. FILTER WALL
3. HOLE ON WALL MIN ø 72 mm
4. 1½" STRAIGHT THROUGH VALVE

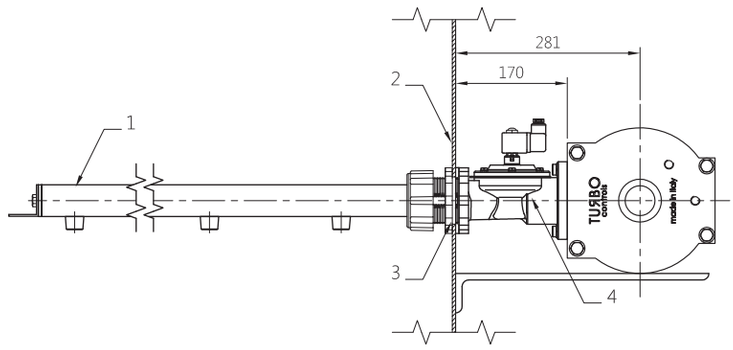

1. 1 ½" AIR CANNON
2. FILTER WALL
3. HOLE ON WALL MIN ø 72 mm
4. 1½" STRAIGHT THROUGH VALVE

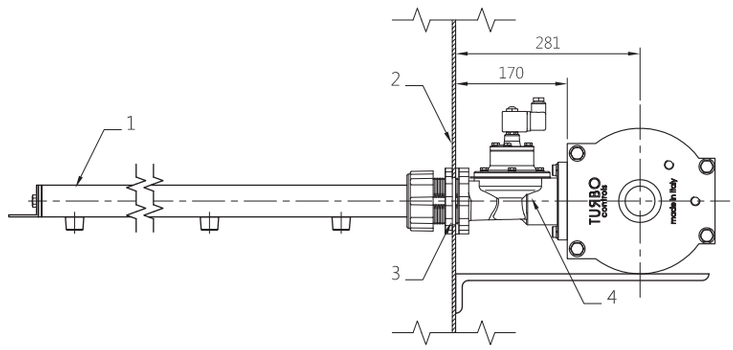

Cat_Turbo_2018_Serbatoi_EN.indd 54 16/01/19 12:02

8” ALUTANK SERIES WITH 1” 1½ DN VALVES

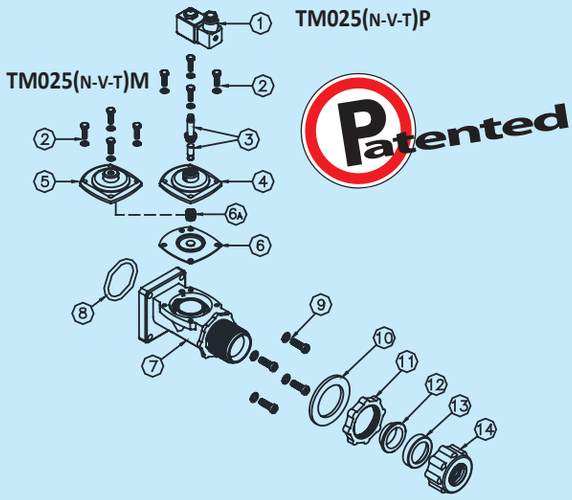

DESCRIPTION		TM025(N-V-T)P / TM025(N-V-T)M
1	Coil - Connector	BH10 V## / V##
2	Screws - Washers	TKITVTE06X20X4
3	Pilot unit	1331080
4	Pilot cover	1251750
5	Remote cover	1251770
6a	Diaphragm spring	3241002
6	Diaphragm (N-V-T)	TKISM025N Neoprene TKISM025V Viton TKISM025T Low temperature
7	Valve body	1251180
8	O-R gasket	3301271
9	Screws - Washers	TKITVTE08X25X4
10	Seal	3141702
11	Lock nut	3181036
12	Conical seal	3301013
13	Retaining ring	1321010
14	Hose clamp high nut	1281045

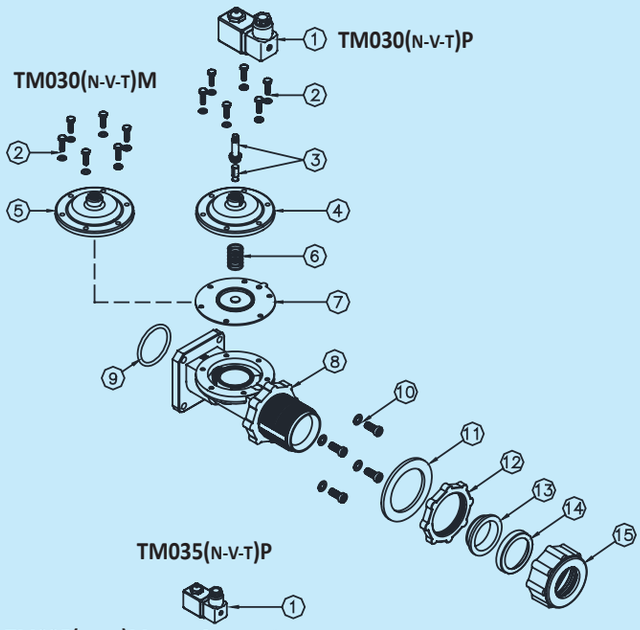

DESCRIPTION		TM030(N-V-T)P / TM030(N-V-T)M
1	Coil - Connector	BH10 V## / V##
2	Screws - Washers	TKITVTE06X20X6
3	Pilot unit	1331080
4	Pilot cover	1251802
5	Remote cover	1251805
6	Diaphragm spring	3241018
7	Diaphragm (N-V-T)	TKISM030N Neoprene TKISM030V Viton TKISM030T Low temperature
8	Valve body	1251320
9	O-R gasket	3301281
10	Screws - Washers	TKITVTE10X25X4
11	Seal	3141706
12	Lock nut	3181032
13	Conical seal	3301017
14	Retaining ring	1321012
15	Hose clamp high nut	1281050

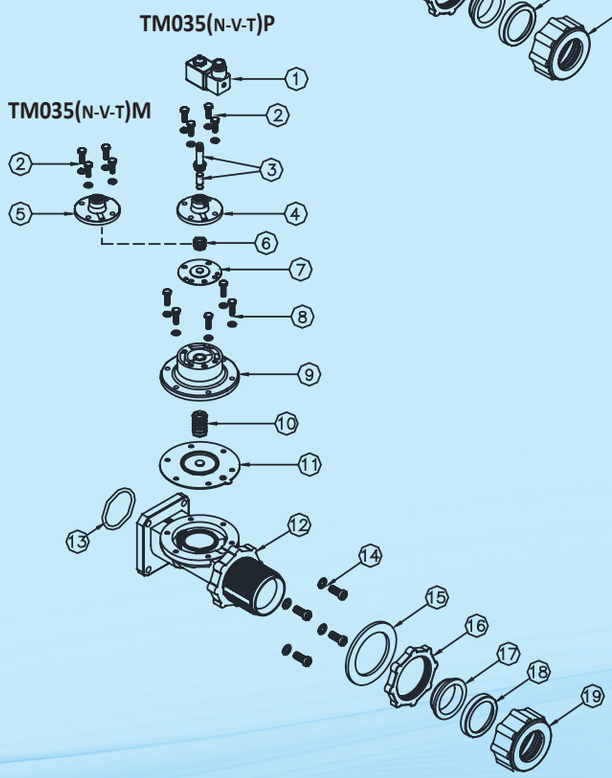

DESCRIPTION		TM035(N-V-T)P / TM035(N-V-T)M
1	Coil - Connector	BH10 V## / V##
2	Screws - Washers	TKITVTE06X18X4
3	Pilot unit	1331080
4	Pilot cover	1251720
5	Remote cover	1251740
6	Diaphragm spring	3241006
7	Secondary Diaphragm (N-V-T)	TKISM010N Neoprene TKISM010V Viton TKISM010T Low temperature
8	Screws - Washers	TKITVTE06X20X6
9	Cover	1251810
10	Diaphragm spring	3241018
11	Primary Diaphragm (N-V-T)	TKISM035N Neoprene TKISM035V Viton TKISM035T Low temperature
12	Valve body	1251320
13	O-R gasket	3301281
14	Screws - Washers	TKITVTE10X25X4
15	Seal	3141706
16	Lock nut	3181032
17	Conical seal	3301017
18	Retaining ring	1321012
19	Hose clamp high nut	1281050

V## / V## = 24 Vdc
- 24 Vac - 115 Vac - 230 Vac

PACK SERIES

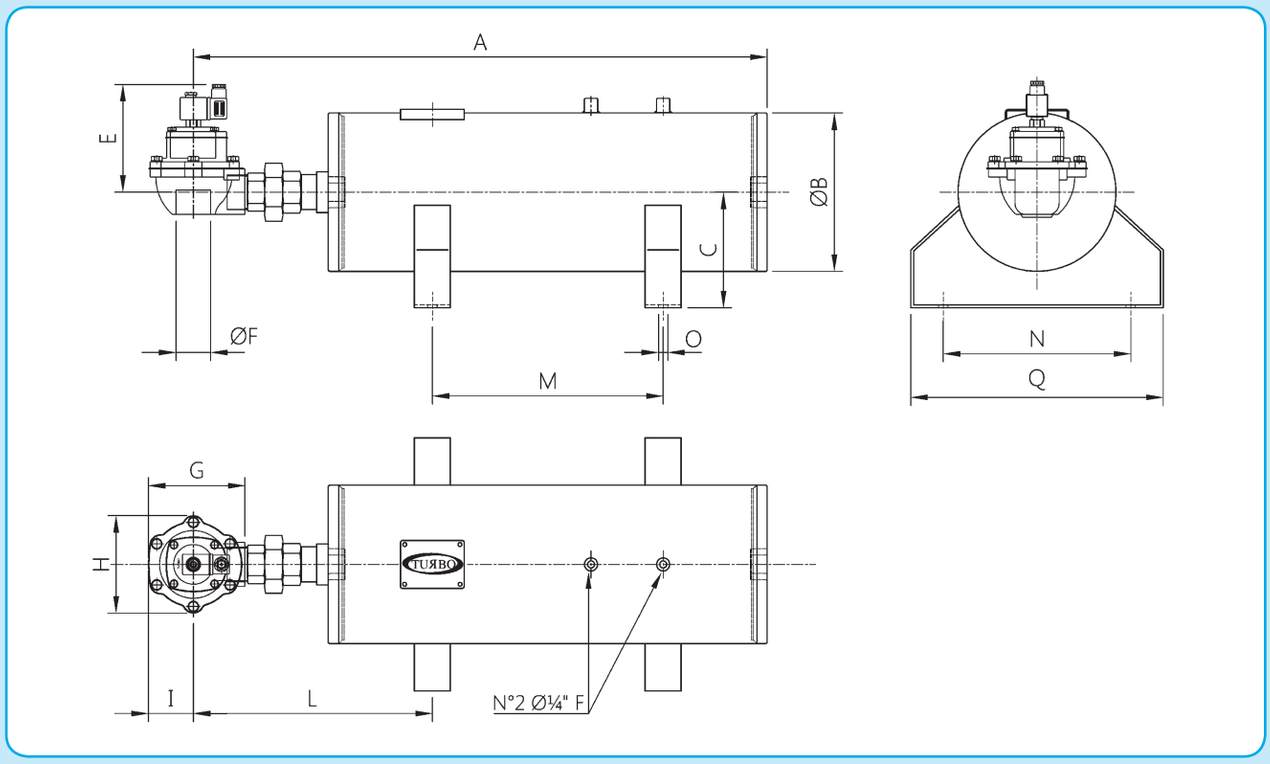

Model	A	ØB	C	E	ØF	G	H	I	L	M	N	ØO	Ø P	Q
PACK 5	545	141.3 (ø5”)	100	100	¾”	90	73	38	265	150	120	13	½”	250
PACK 15	868	168.3 (ø6”)	124	100	1”	90	73	38	368	280	160	13	½”	250
PACK 25	895	219.1 (ø8”)	160	150	1 ½"	133.5	135	62	375	320	260	13	½”	350
PACK 50	1174	273 (ø10”)	214	185	2”	198	190	83	539	320	260	13	½”	350
PACK 100	1600	324 (ø12”)	214	162	2 ½"	198	190	83	535	800	260	13	½”	350

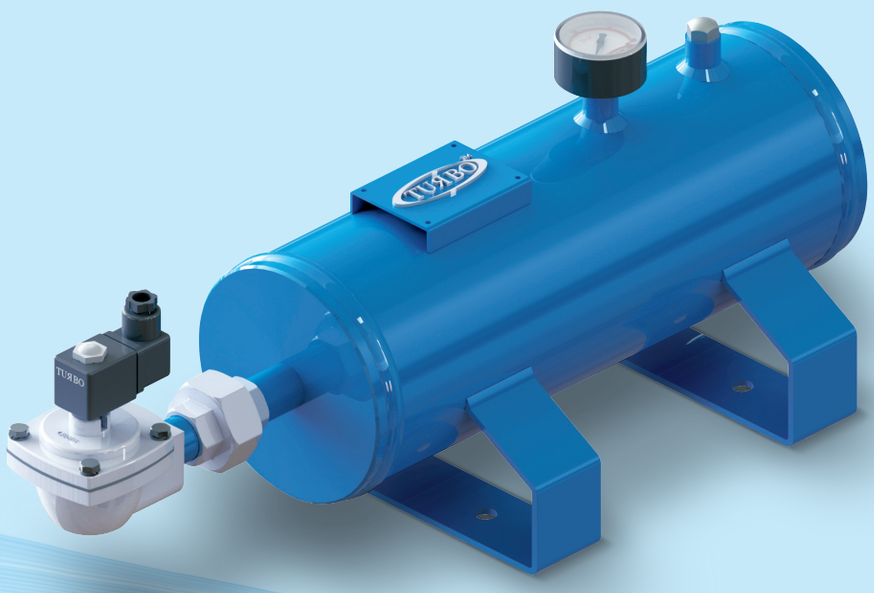

Cat_Turbo_2018_Serbatoi_EN.indd 56 16/01/19 12:02

TS SERIES

CODE AND TECHNICAL FEATURES

TS 25 P100 N10 D10 L150 F200 H15 A2 T2

- TS = AIR CANNON
- **Ø D: AIR CANNON DIAMETER**
  - 20 ¾ ”
  - 25 1”
  - 40 1 ½"
  - 50 2”
- P = DISTANCE BETWEEN NOZZLES
- N = NUMBER OF NOZZLES
- D = NOZZLE INNER DIAMETER
- L = DISTANCE BETWEEN START OF AIR CANNON HOSE AND THE FIRST NOZZLE
- F = DISTANCE BETWEEN THE LAST NOZZLE AND THE BRACKET
- H = NOZZLE HEIGHT
- A1 = START OF THE PLAIN PIPE
- A2 = START OF THE THREADED PIPE
- T1 = PIPE END WITH PLUG
- T2 = PIPE END WITH BRACKET

For special executions and boring exceeding 2", please contact our technical dept.

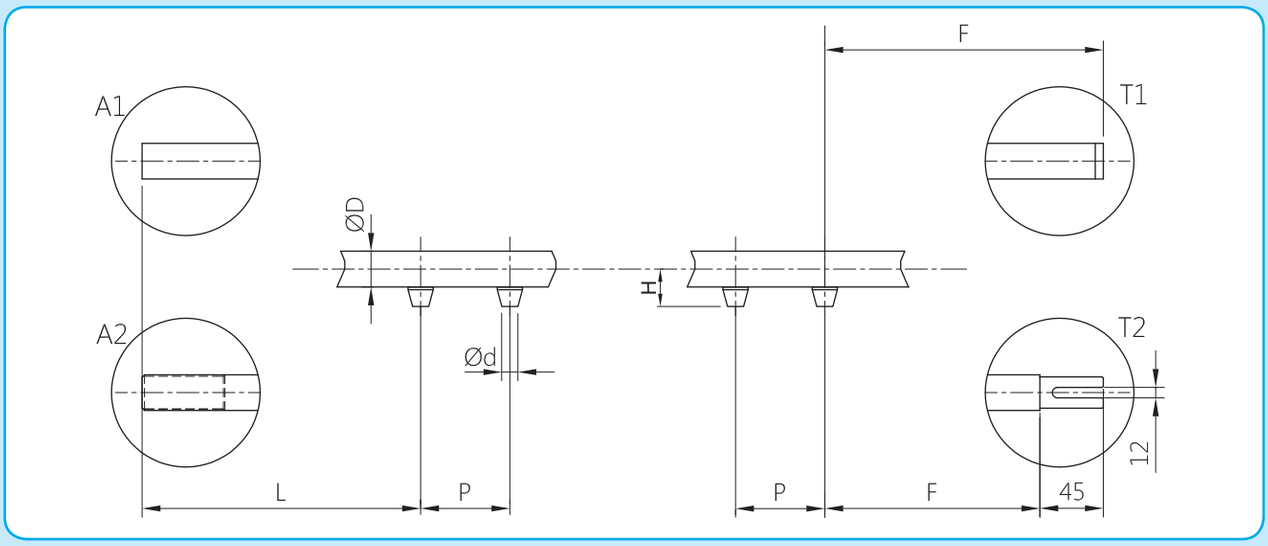

DESCRIPTION

1	Air cannon
2	Nozzle
3	O-Ring
4	Plug
5	Bracket
6	Screws + Washers

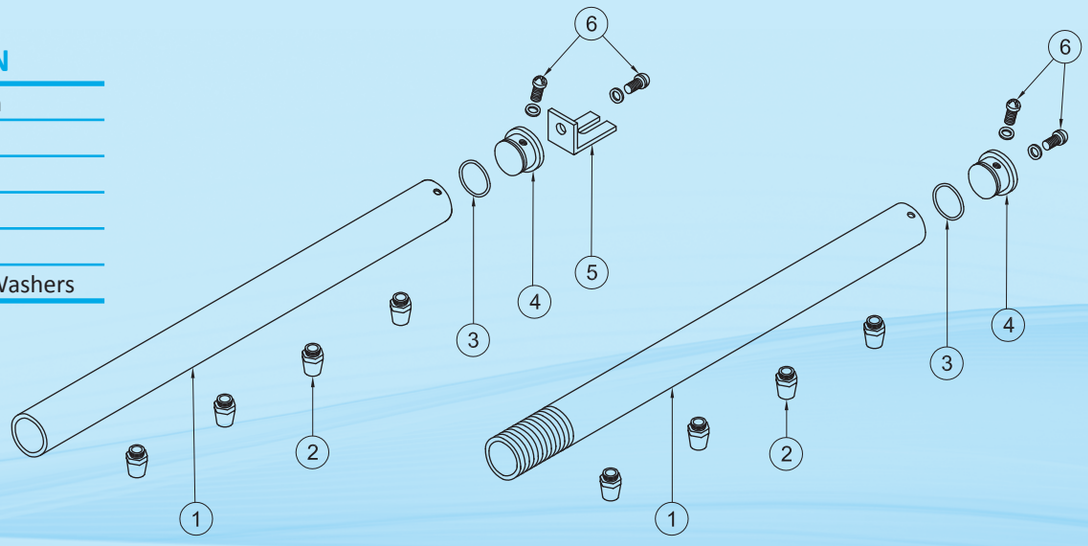

DIAPHRAGM VALVES

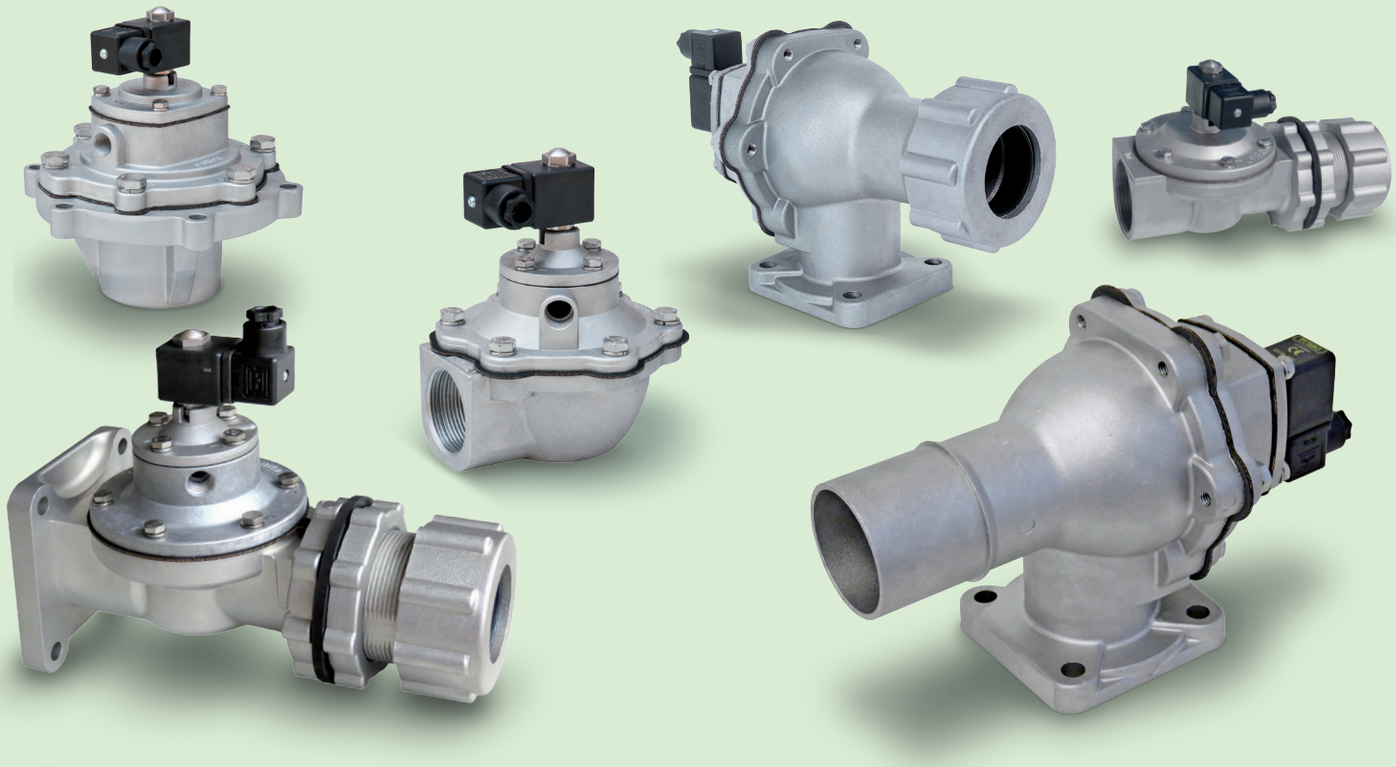

In order to satisfy its customers, Turbo has designed and manufactured a series of dust collector valves, which can meet any requirement.

The flexibility and dynamism of our company, combined with our in-depth technical skills, means that any design requirement, even the most particular, can be met very quickly.

All Turbo valves are designed to last over time.

Moreover, the valves' opening and closing allow you to optimise air and energy consumption.

We provide the following ranges of valves:

1 - Diaphragm valves with threaded connectors (TF series)
2 - Diaphragm valves with quick connectors (TD series)
3 - Flanged diaphragm valves (TE series)

Cat_Turbo_2018_Valvole_EN.indd 58 16/01/19 12:12

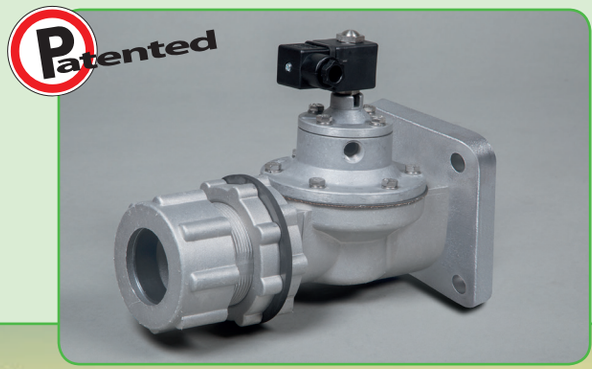

4 - Diaphragm valves for flat surfaces (TS series)
5 - Straight through diaphragm valves (TL series)
6 - Flanged straight through diaphragm valves (TM series)

These valves can be manufactured in compliance with the EU 2014/34/EU European directive with the following markings:

ATEX II 2 GD (zone 1 and 21)
ATEX II 3 GD (zone 2 and 22).

(The ATEX directive is illustrated at page 107/108)

Cat_Turbo_2018_Valvole_EN.indd 59 16/01/19 12:12

HOW TO ORDER

example F 25 N-V-T 02450 P

TF: THREADED VALVES
TD: VALVE WITH QUICK CONNECTORS
TE: FLANGED VALVE
TS: VALVE FOR FLAT SURFACES
TL: STRAIGHT THROUGH VALVE
TM: FLANGED STRAIGHT THROUGH VALVE

VALVE DIAMETER

¾ ” =	20
1” =	25
1½ " =	30
1½ " =	35
1½ " =	40
1½ " =	45
2” =	54
2” =	55
2½ " =	65
3” =	75
4” =	100

N = STD NEOPRENE DIAPHRAGM
V = VITON DIAPHRAGM
T = LOW TEMPERATURE DIAPHRAGM

COIL VOLTAGE

24V/50-60Hz =	02450
115V/50-60Hz =	11050
230V/50-60Hz =	22050
12VDC =	012DC
24VDC =	024DC

P = BUILT-IN PILOT
M = REMOTE PILOT

The Code TF025NPB represents a threaded valve of the TF series, which has an electric pilot installed (P), a 1’’ diameter (25) and is powered by a 24V 50Hz voltage (02450).

Cat_Turbo_2018_Valvole_EN.indd 60 16/01/19 12:12

DIAPHRAGM VALVES WITH THREADED CONNECTORS	TF series
DIAPHRAGM VALVES WITH QUICK CONNECTORS	TD series
FLANGED DIAPHRAGM VALVES	TE series
DIAPHRAGM VALVES FOR FLAT SURFACES	TS series
STRAIGHT THROUGH DIAPHRAGM VALVES	TL series
FLANGED STRAIGHT THROUGH DIAPHRAGM VALVES	TM series

Cat_Turbo_2018_Valvole_EN.indd 61 16/01/19 12:13

VALVES WITH THREADED CONNECTORS - TF SERIES - Ø ¾”-1”-1 ½”-2”-2 ½”

FEATURES	
Fluids	Non-lubricated filtered air
Operating temperature	Neoprene diaphragm -20°C +80°C Viton diaphragm -20°C +200°C Low T. diaphragm -40°C; +80°C
Operating pressure	between 0.5 and 7.5 bar
Body and cover	Die-cast aluminium
Pilot core	Stainless steel
Screws and bolts	Stainless steel
Coil insulation	Class H
Connector	PG 9 EN175301-803
Connector + coil protection	IP65 EN60529
Standard voltage	24V/50-60Hz (±10%) 19VA
	115V/50-60Hz (±10%) 19VA
	230V/50-60Hz (±10%) 19VA
	24VDC (± 10%) 18 Watt

	DESCRIPTION	TF020(N-V-T)P / TF020(N-V-T)M	TF025(N-V-T)P / TF025(N-V-T)M
1	Coil - Connector	BH10 V## / V##	BH10 V## / V##
2	Screws - Washers	TKITVTE06X20X4	TKITVTE06X20X4
3	Pilot unit	1331080	1331080
4	Pilot cover	1251750	1251750
5	Remote cover	1251770	1251770
6	Diaphragm (N-V-T)	TKISM025N Neoprene TKISM025V Viton TKISM025T Low temperature	TKISM025N Neoprene TKISM025V Viton TKISM025T Low temperature
6a	Diaphragm spring	3241002	3241002
7	Valve body	1251120	1251190

TFP version with built-in pilot / TFM version with remote pilot

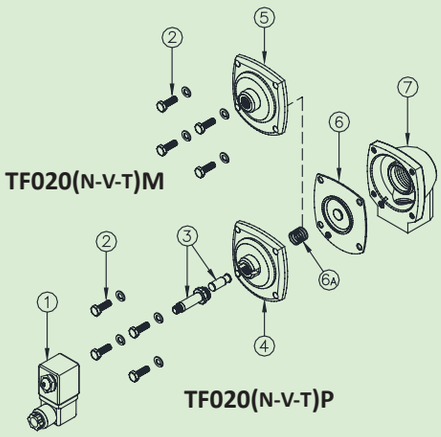

	DESCRIPTION	TF040(N-V-T)P TF040(N-V-T)M	TF055(N-V-T)P TF055(N-V-T)M	TF065(N-V-T)P TF065(N-V-T)M
1	Coil + Connector	BH10 V## / V##	BH10 V## / V##	BH10 V## / V##
2	Screws + Washers	TKITVTE06X20X4	TKITVTE06X20X4	TKITVTE06X20X4
3	Pilot unit	1331080	1331080	1331080
4	Pilot cover	1251750	1251750	1251750
5	Remote cover	1251770	1251770	1251770
6	Secondary Diaphragm (N-V-T)	TKISM025N Neoprene TKISM025V Viton TKISM025T Low temperature	TKISM025N Neoprene TKISM025V Viton TKISM025T Low temperature	TKISM025N Neoprene TKISM025V Viton TKISM025T Low temperature
6a	Diaphragm spring	3241002	3241002	3241002
7	Screws + Washers	TKITVTE08X20X6	TKITVTE10X25X6	TKITVTE10X25X6
8	Cover	1251620	1251660	1251660
9	Diaphragm spring	3241024	3241024	3241024
10	Primary Diaphragm (N-V-T)	TKISM040N Neoprene TKISM040V Viton TKISM040T Low temperature	TKISM055N Neoprene TKISM055V Viton TKISM055T Low temperature	TKISM065N Neoprene TKISM065V Viton TKISM065T Low temperature
11	Valve body	1251400	1251470	1251500

TFP version with built-in pilot / TFM version with remote pilot
V## / V## = 24 Vdc - 24 Vac - 115 Vac - 230 Vac

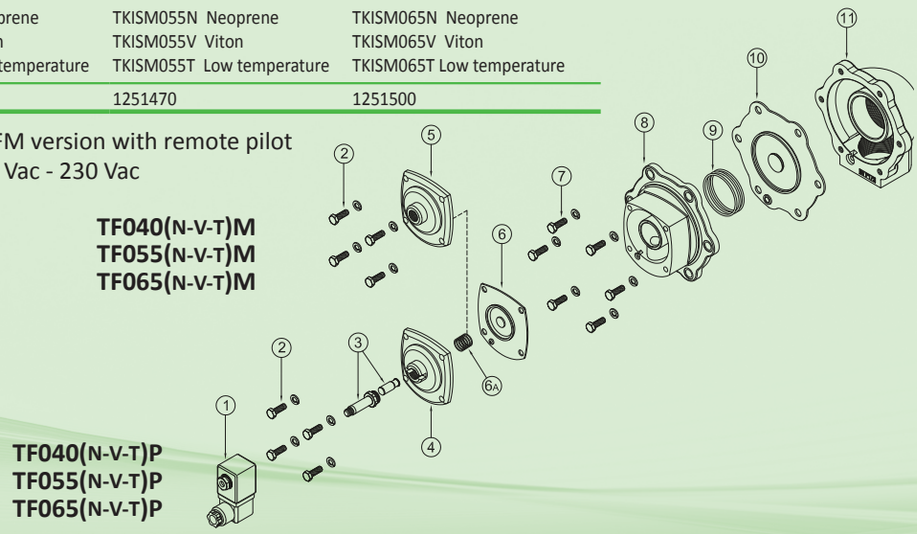

Cat_Turbo_2018_Valvole_EN.indd 62 16/01/19 12:13

TF SERIES- ø ¾”-1”-1 ½”-2”-2 ½” - OVERALL DIMENSIONS

TF020(N-V-T)P / TF025(N-V-T)P

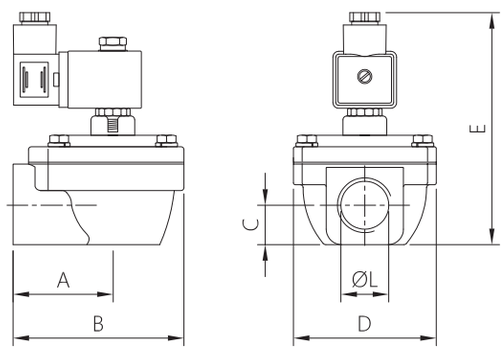

TF020(N-V-T)M / TF025(N-V-T)M

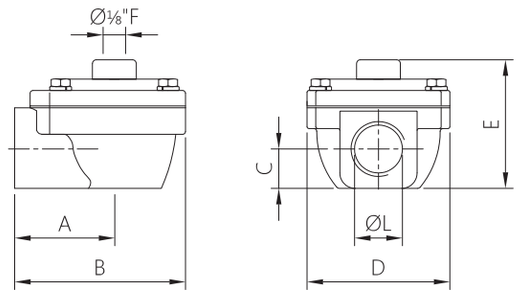

TF040(N-V-T)P / TF055(N-V-T)P / TF065(N-V-T)P

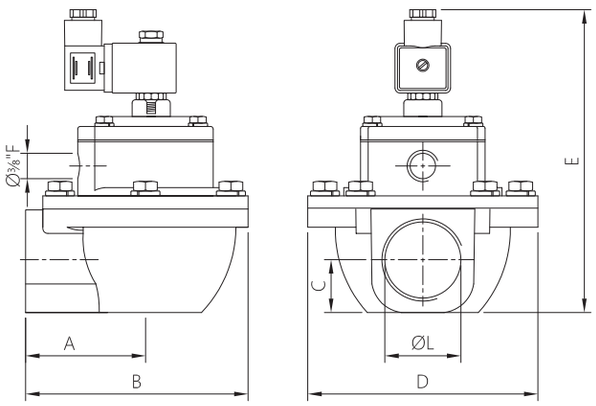

TF040(N-V-T)M / TF055(N-V-T)M / TF065(N-V-T)M

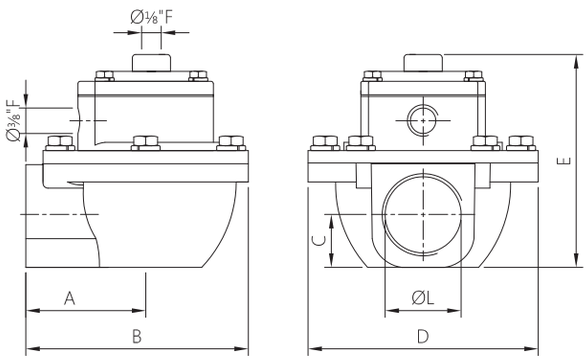

MODEL	ø L (nom)	A	B	C	D	E	Weight (kg)
TF020(N-V-T)P	¾”	52	90	20.5	74	~125	0.6
TF025(N-V-T)P	1”	52	90	20.5	74	~125	0.5
TF040(N-V-T)P	1 ½"	71.3	135	31	140	~188	1.6
TF055(N-V-T)P	2”	114	203	40	194	~225	3.7
TF065(N-V-T)P	2 ½"	114	203	48	194	~225	3.6
TF020(N-V-T)M	¾”	52	90	20.5	74	~67	0.4
TF025(N-V-T)M	1”	52	90	20.5	74	~67	0.3
TF040(N-V-T)M	1 ½"	71.3	135	31	140	~130	1.4
TF055(N-V-T)M	2”	114	203	40	194	~167	3.5
TF065(N-V-T)M	2 ½"	114	203	48	194	~167	3.4

Note: NPT threads also available.
Please contact our technical department for further information

VALVES WITH THREADED CONNECTORS - TF SERIES - ø 1 ½”

FEATURES	
Fluids	Non-lubricated filtered air
Operating temperature	Neoprene diaphragm -20°C +80°C Viton diaphragm -20°C +200°C Low T. diaphragm -40°C; +80°C
Operating pressure	between 0.5 and 7.5 bar
Body and cover	Die-cast aluminium
Pilot core	Stainless steel
Screws and bolts	Stainless steel
Coil insulation	Class H
Connector	PG 9 EN175301-803
Connector + coil protection	IP65 EN60529
Standard voltage	24V/50-60Hz (±10%) 19VA
	115V/50-60Hz (±10%) 19VA
	230V/50-60Hz (±10%) 19VA
	24VDC (± 10%) 18 Watt

DESCRIPTION		TF045(N-V-T)P / TF045(N-V-T)M
1	Coil - Connector	BH10 V## / V##
2	Screws - Washers	TKITVTE06X18X4
3	Pilot unit	1331080
4	Pilot cover	1251715
5	Remote cover	1251745
6	Diaphragm spring	3241006
7	Secondary diaphragm (N-V-T)	TKISM010N Neoprene TKISM010V Viton TKISM010T Low temperature
8	Screws - Washers	TKITVTE08X20X6
9	Cover	1251840
10	Diaphragm spring	3241024
11	Primary Diaphragm (N-V-T)	TKISM045N Neoprene TKISM045V Viton TKISM045T Low temperature
12	Valve body	1251400

TFP version with built-in pilot / TFM version with remote pilot
V## / V## = 24 Vdc - 24 Vac - 115 Vac - 230 Vac

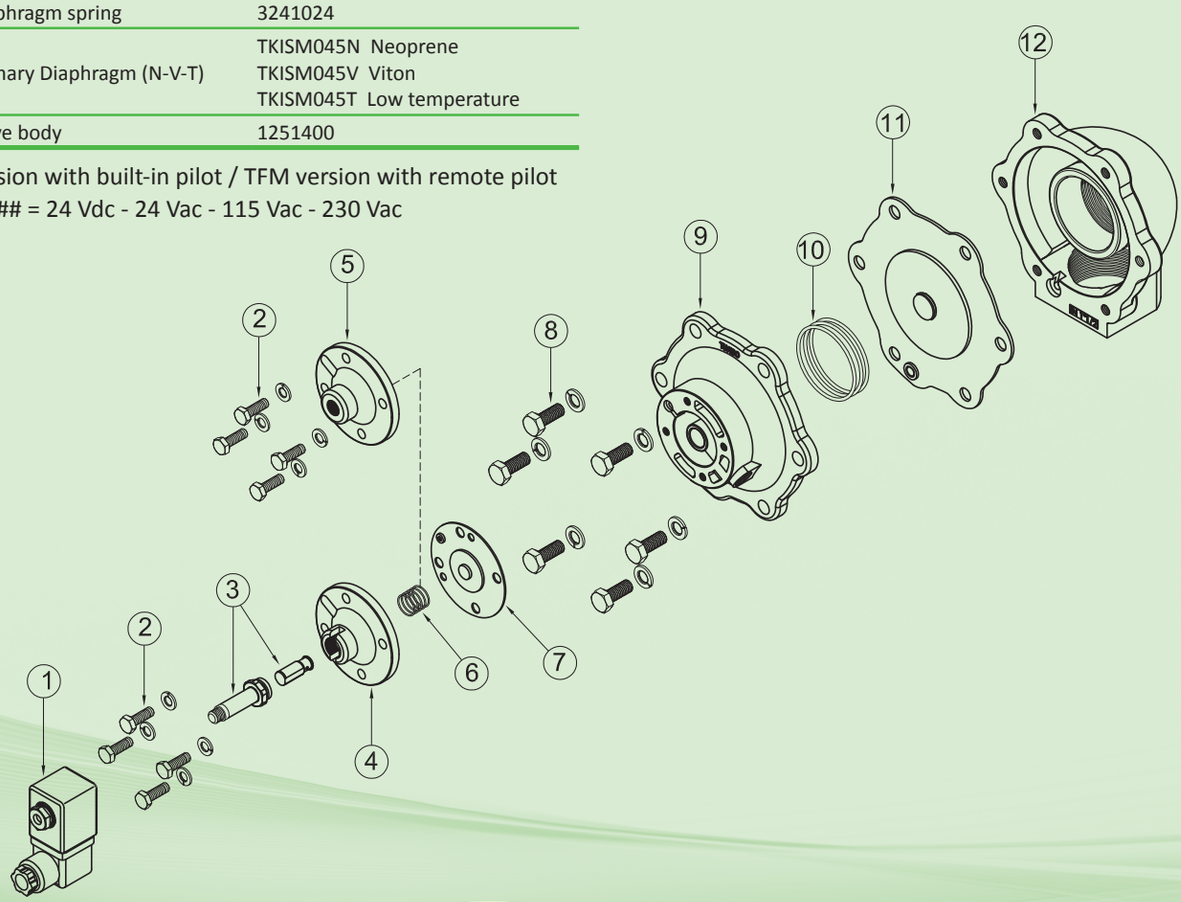

Cat_Turbo_2018_Valvole_EN.indd 64 16/01/19 12:13

TF SERIES - Ø 1 ½"- OVERALL DIMENSIONS

TF045(N-V-T)P

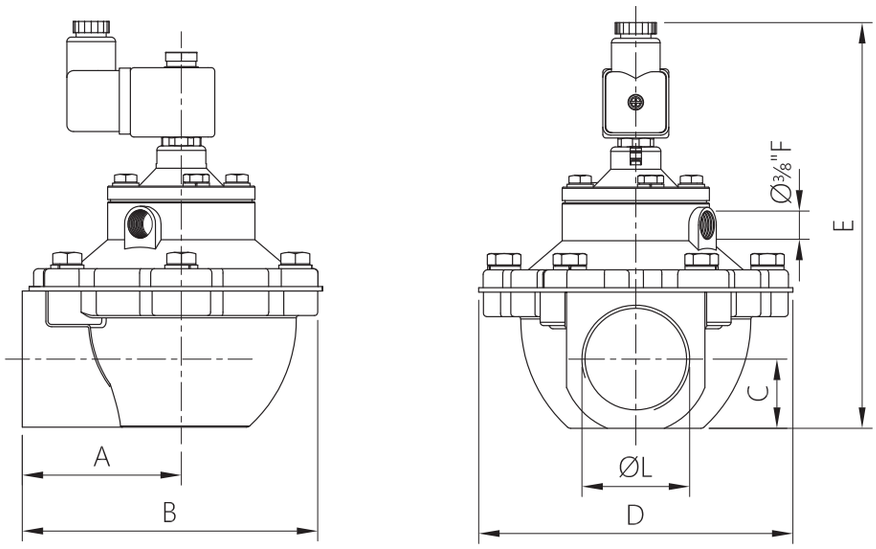

TF045(N-V-T)M

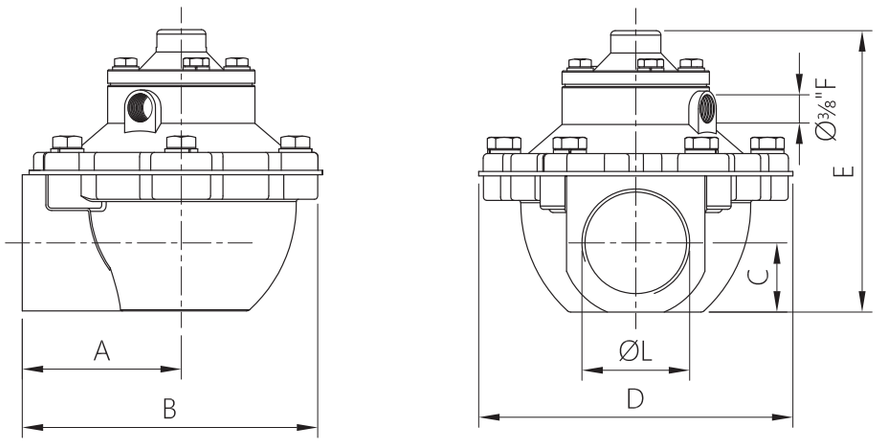

MODEL	ø L (nom)	A	B	C	D	E	Weight (kg)
TF045(N-V-T)P	1 ½"	71.3	135	31	140	~188	1.6
TF045(N-V-T)M	1 ½"	71.3	135	31	140	~122	1.4

VALVES WITH THREADED CONNECTORS - F SERIES - Ø 2’’

FEATURES	
Fluids	Non-lubricated filtered air
Operating temperature	Neoprene diaphragm -20°C +80°C Viton diaphragm -20°C +200°C Low T. diaphragm -40°C; +80°C
Operating pressure	between 0.5 and 7.5 bar
Body and cover	Die-cast aluminium
Pilot core	Stainless steel
Screws and bolts	Stainless steel
Coil insulation	Class H
Connector	PG 9 EN175301-803
Connector + coil protection	IP65 EN60529
Standard voltage	24V/50-60Hz (±10%) 19VA
	115V/50-60Hz (±10%) 19VA
	230V/50-60Hz (±10%) 19VA
	24VDC (± 10%) 18 Watt

Compact valve for installations with pitch of 160 mm

DESCRIPTION		TF054(N-V-T)P / TF054(N-V-T)M
1	Coil - Connector	BH10 V## / V##
2	Screws - Washers	TKITVTE06X18X4
3	Pilot unit	1331080
4	Pilot cover	1251715
5	Remote cover	1251745
6	Diaphragm spring	3241006
7	Secondary diaphragm (N-V-T)	TKISM010N Neoprene TKISM010V Viton TKISM010T Low temperature
8	Screws - Washers	TKITVTE08X20X6
9	Cover	1251661
10	Diaphragm spring	3241024
11	Primary Diaphragm (N-V-T)	TKISM054N Neoprene TKISM054V Viton TKISM054T Low temperature
12	Valve body	1251477

TFP version with built-in pilot
TFM version with remote pilot

V## / V## = 24 Vdc - 24 Vac - 115 Vac - 230 Vac

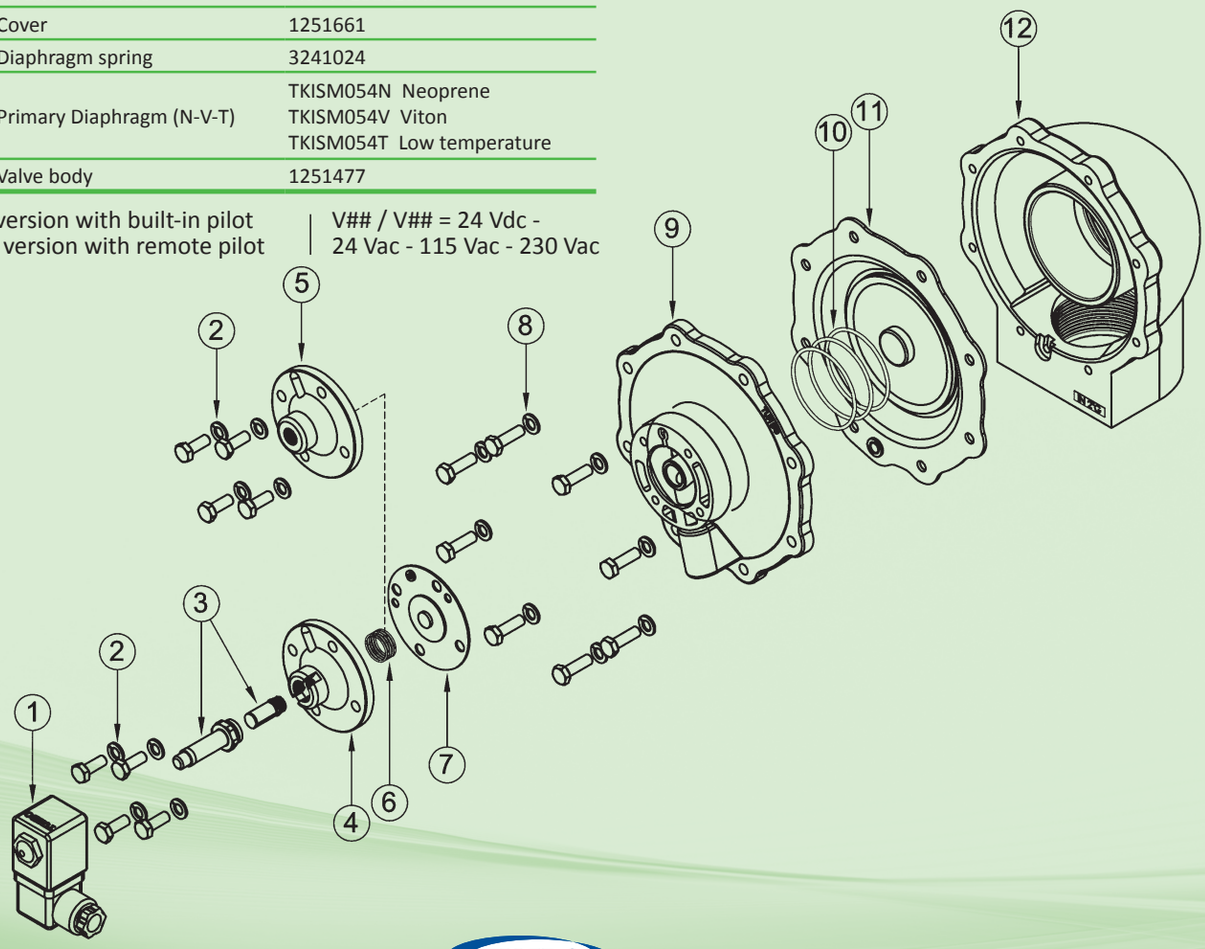

Cat_Turbo_2018_Valvole_EN.indd 66 16/01/19 12:13

F SERIES - Ø 2”- OVERALL DIMENSIONS

TF054(N-V-T)P

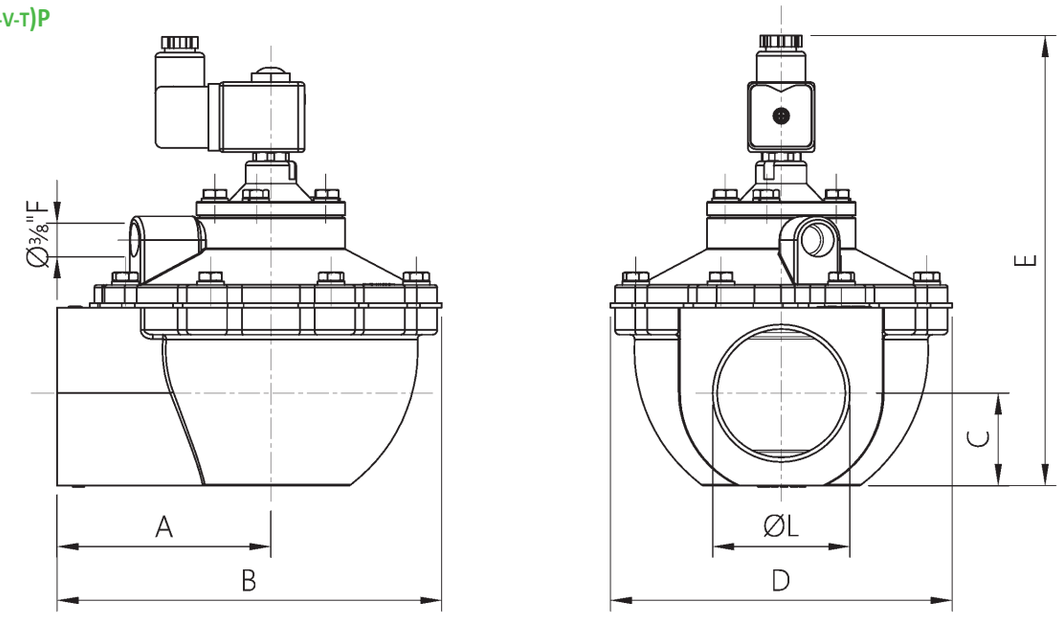

TF054(N-V-T)M

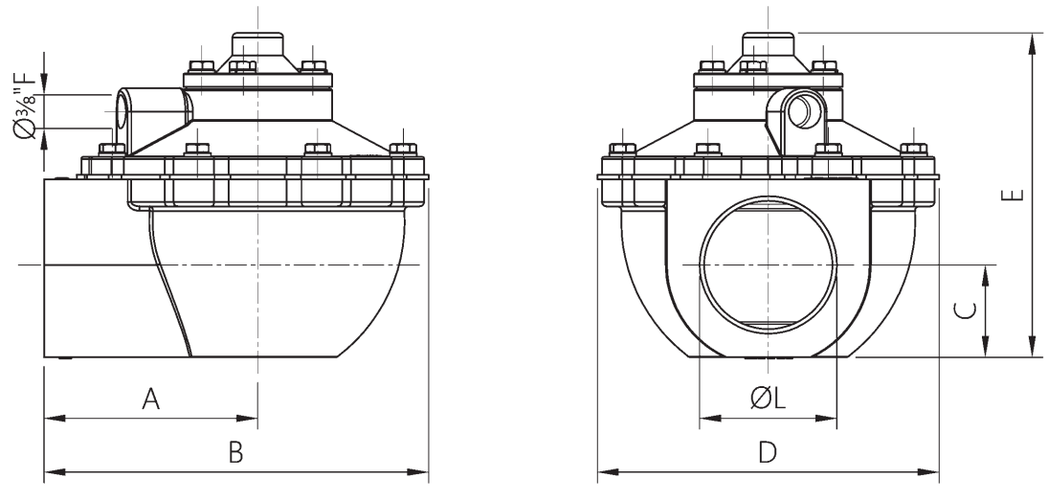

MODEL	ø L (nom)	A	B	C	D	E	Weight (kg)
TF054(N-V-T)P	2”	95	171	41	152	200	2
TF054(N-V-T)M	2”	95	171	41	152	145	1.8

Cat_Turbo_2018_Valvole_EN.indd 67 16/01/19 12:13

VALVES WITH THREADED CONNECTORS - TF SERIES - Ø 3’’

FEATURES	
Fluids	Non-lubricated filtered air
Operating temperature	Neoprene diaphragm -20°C +80°C Viton diaphragm -20°C +200°C Low T. diaphragm -40°C; +80°C
Operating pressure	between 0.5 and 7.5 bar
Body and cover	Die-cast aluminium
Pilot core	Stainless steel
Screws and bolts	Stainless steel
Coil insulation	Class H
Connector	PG 9 EN175301-803
Connector + coil protection	IP65 EN60529
Standard voltage	24V/50-60Hz (±10%) 19VA
	115V/50-60Hz (±10%) 19VA
	230V/50-60Hz (±10%) 19VA
	24VDC (± 10%) 18 Watt

DESCRIPTION		TF085(N-V-T)P / TF085(N-V-T)M
1	Coil - Connector	BH10 V## / V##
2	Screws - Washers	TKITVTE06X20X4
3	Pilot unit	1331080
4	Pilot cover	1251750
5	Remote cover	1251770
6	Secondary diaphragm (N-V-T)	TKISM025N Neoprene TKISM025V Viton TKISM025T Low temperature
7	Diaphragm spring	3241002
8	Screws - Washers	TKITVTE10X30X8
9	Cover	1251680
10	Diaphragm spring	3241024
11	Primary Diaphragm (N-V-T)	TKISM085N Neoprene TKISM085V Viton TKISM085T Low temperature
12	Valve body	1251570

TFP version with built-in pilot / TFM version with remote pilot
V## / V## = 24 Vdc - 24 Vac - 115 Vac - 230 Vac

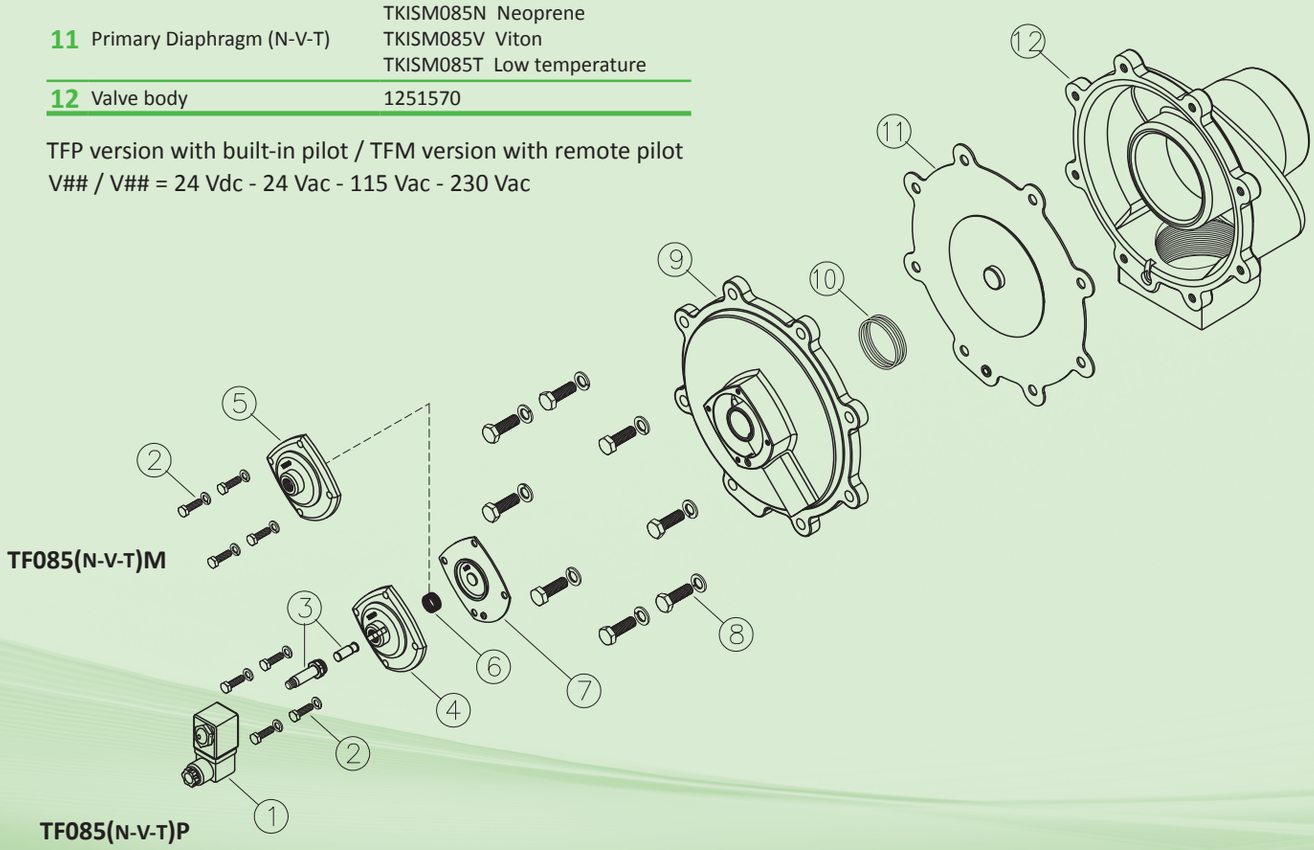

Cat_Turbo_2018_Valvole_EN.indd 68 16/01/19 12:13

TF SERIES - Ø 3”- OVERALL DIMENSIONS

TF085(N-V-T)P

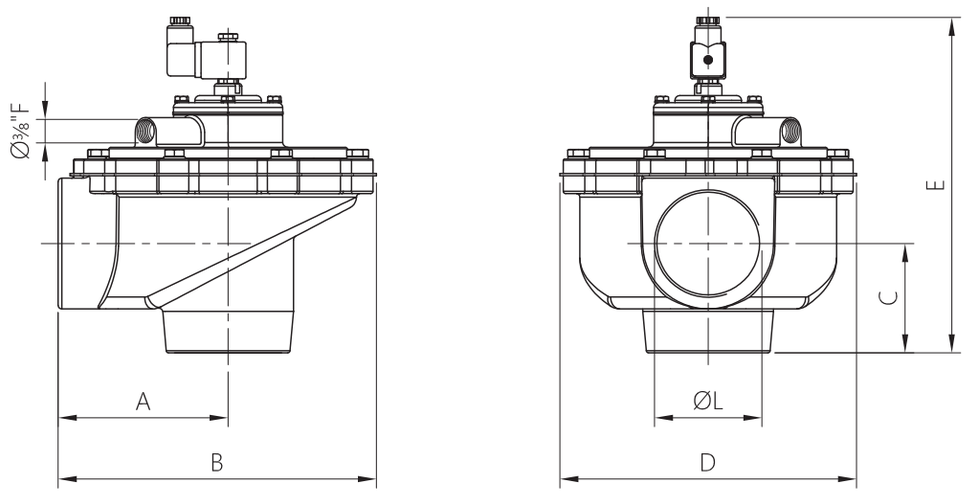

TF085(N-V-T)M

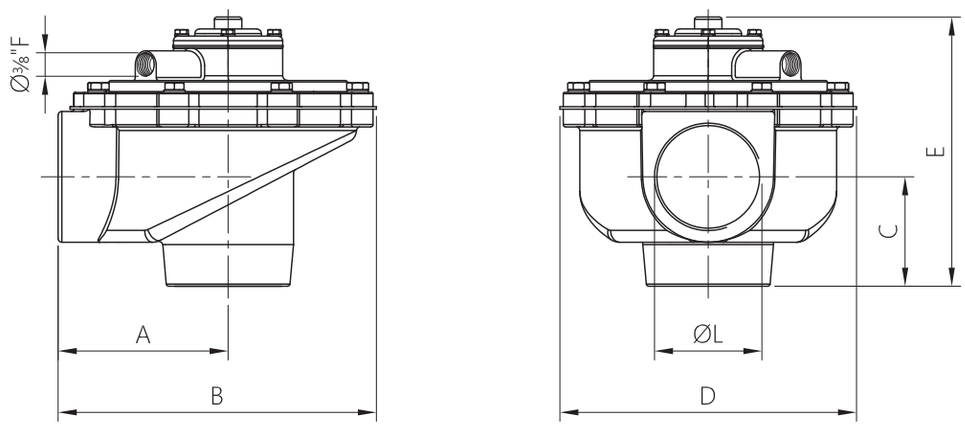

MODEL	ø L (nom)	A	B	C	D	E	Weight (kg)
TF085(N-V-T)P	3”	143	267	92	250	~282	7.3
TF085(N-V-T)M	3”	143	267	92	250	~227	7.1

Cat_Turbo_2018_Valvole_EN.indd 69 16/01/19 12:13

VALVES WITH QUICK CONNECTORS - TD SERIES - Ø ¾”- 1”- 1 ½”

FEATURES	
Fluids	Non-lubricated filtered air
Operating temperature	Neoprene diaphragm -20°C +80°C Viton diaphragm -20°C +200°C Low T. diaphragm -40°C; +80°C
Operating pressure	between 0.5 and 7.5 bar
Body and cover	Die-cast aluminium
Pilot core	Stainless steel
Screws and bolts	Stainless steel
Coil insulation	Class H
Connector	PG 9 EN175301-803
Connector + coil protection	IP65 EN60529
Standard voltage	24V/50-60Hz (±10%) 19VA
	115V/50-60Hz (±10%) 19VA
	230V/50-60Hz (±10%) 19VA
	24VDC (± 10%) 18 Watt

	DESCRIPTION	TD020(N-V-T)P / TD020(N-V-T)M	TD025(N-V-T)P / TD025(N-V-T)M
1	Coil - Connector	BH10 V## / V##	BH10 V## / V##
2	Screws - Washers	TKITVTE06X18X4	TKITVTE06X18X4
3	Pilot unit	1331080	1331080
4	Pilot cover	1251750	1251750
5	Remote cover	1251770	1251770
6	Diaphragm (N-V-T)	TKISM025N Neoprene TKISM025V Viton TKISM025T Low temperature	TKISM025N Neoprene TKISM025V Viton TKISM025T Low temperature
6a	Diaphragm spring	3241002	3241002
7	Valve body	1251110	1251310
8	Conical seal	3301010	3301013
9	Retaining ring	1321006	1321010
10	Hose clamp high nut	1281040	1281045

TDP version with built-in pilot
TDM version with remote pilot

TD020(N-V-T)M
TD025(N-V-T)M

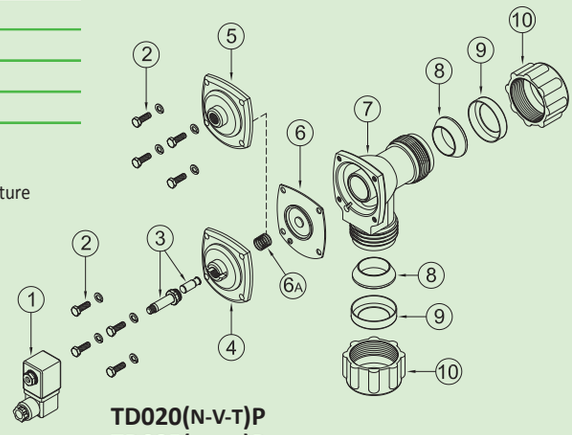

TD020(N-V-T)P
TD025(N-V-T)P

	DESCRIPTION	TD040(N-V-T)P / TD040(N-V-T)M	TD045(N-V-T)P / TD045(N-V-T)M
1	Coil - Connector	BH10 V## / V##	BH10 V## / V##
2	Screws - Washers	TKITVTE06X20X4	TKITVTE06X18X4
3	Pilot unit	1331080	1331080
4	Pilot cover	1251750	1251715
5	Remote cover	1251770	1251745
6	Secondary diaphragm (N-V-T)	TKISM025N Neoprene TKISM025V Viton TKISM025T Low temperature	TKISM010N Neoprene TKISM010V Viton TKISM010T Low temperature
6a	Diaphragm spring	3241002	3241002
7	Screws - Washers	TKITVTE08X20X6	TKITVTE08X20X6
8	Cover	1251620	1251640
9	Diaphragm spring	3241024	3241024
10	Primary Diaphragm (N-V-T)	TKISM040N Neoprene TKISM040V Viton TKISM040T Low temperature	TKISM045N Neoprene TKISM045V Viton TKISM045T Low temperature
11	Valve body	1251440	1251440
12	Conical seal	3301017	3301017
13	Retaining ring	1321012	1321012
14	Hose clamp high nut	1281050	1281050

TDP version with built-in pilot
TDM version with remote pilot

V## / V## = 24 Vdc - 24 Vac - 115 Vac - 230 Vac

TD040(N-V-T)M

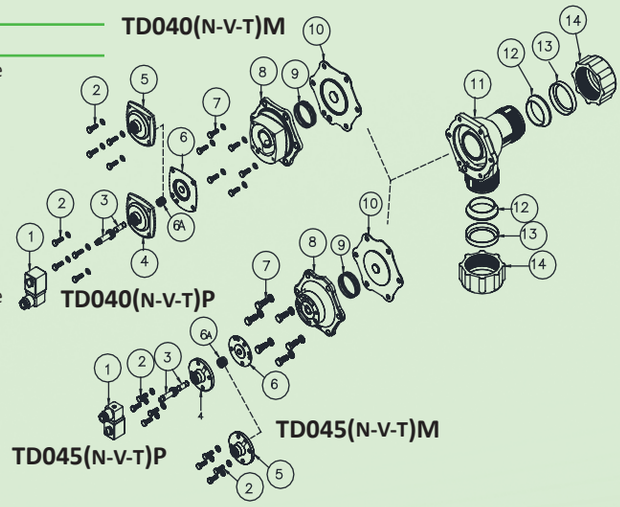

TD040(N-V-T)P

TD045(N-V-T)M

TD045(N-V-T)P

Cat_Turbo_2018_Valvole_EN.indd 70 16/01/19 12:13

TD SERIES - Ø ¾”- 1”- 1 ½” - OVERALL DIMENSIONS

TD020(N-V-T)P / TD025(N-V-T)P

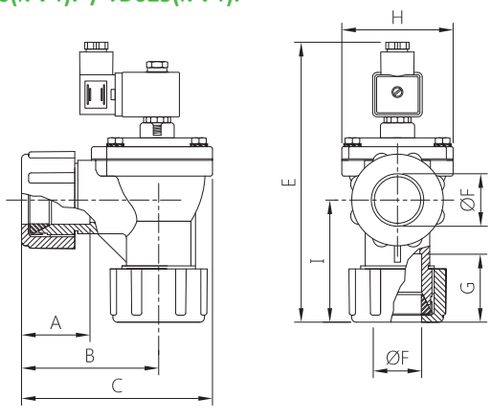

TD020(N-V-T)M / TD025(N-V-T)M

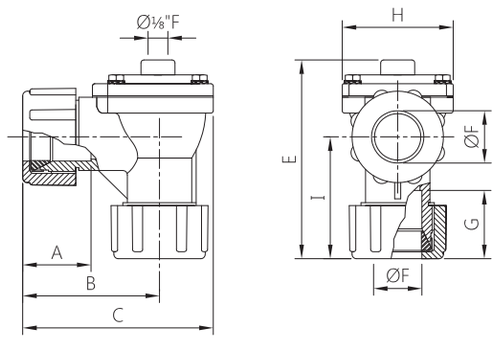

TD040(N-V-T)P

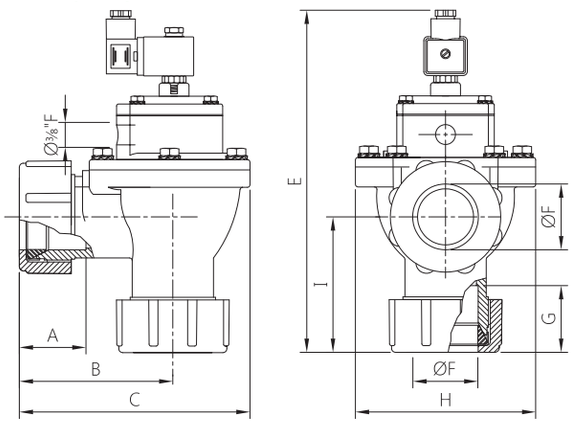

TD040(N-V-T)M

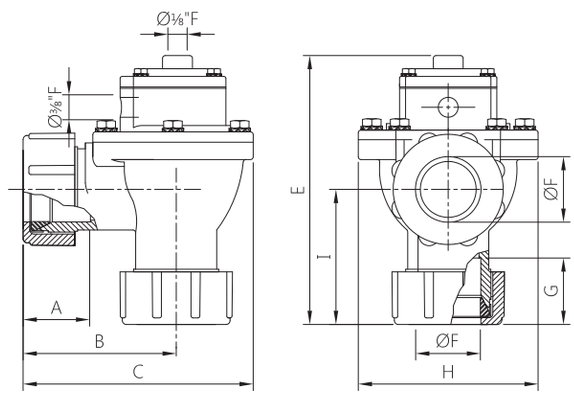

TD045(N-V-T)P

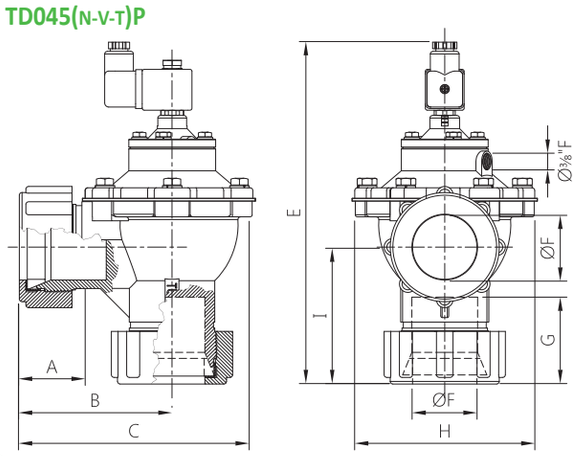

TD045(N-V-T)M

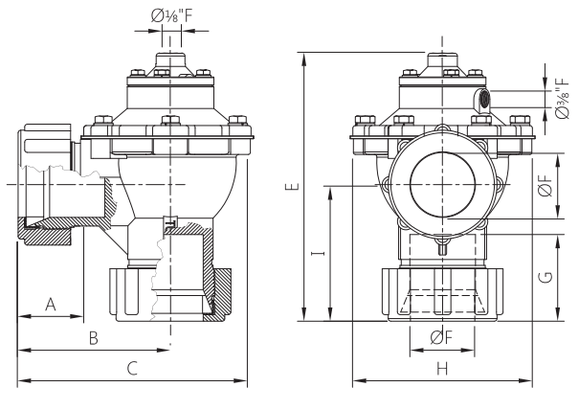

A, B, and C dimensions vary according to the compression of the conical seal

MODEL	ø L (nom)	A	B	C	E	Ø F	G	H	I	Weight (kg)
TD020(N-V-T)P	¾ ”	48	90	128	~189	28.5	48	74	80	1.1
TD025(N-V-T)P	1”	48	90	128	~189	35	48	74	80	1
TD040(N-V-T)P	1 ½"	66	114	180	~264	50	66	140	101	2.5
TD045(N-V-T)P	1 ½"	66	114	180	~260	50	66	140	101	2.5
TD020(N-V-T)M	¾ ”	48	90	128	~131	28.5	48	74	80	1.1
TD025(N-V-T)M	1”	48	90	128	~131	35	48	74	80	0.9
TD040(N-V-T)M	1 ½"	66	114	180	~206	50	66	140	101	2.3
TD045(N-V-T)M	1 ½"	66	114	180	~204	50	66	140	101	2.3

Cat_Turbo_2018_Valvole_EN.indd 71 16/01/19 12:13

FLANGED VALVES - TE SERIES - Ø ¾”- 1”- 1 ½”

TEP version with built-in pilot
TEM version with remote pilot

FEATURES	
Fluids	Non-lubricated filtered air
Operating temperature	Neoprene diaphragm -20°C +80°C Viton diaphragm -20°C +200°C Low T. diaphragm -40°C; +80°C
Operating pressure	between 0.5 and 7.5 bar
Body and cover	Die-cast aluminium
Pilot core	Stainless steel
Screws and bolts	Stainless steel
Coil insulation	Class H
Connector	PG 9 EN175301-803
Connector + coil protection	IP65 EN60529
Standard voltage	24V/50-60Hz (±10%) 19VA
	115V/50-60Hz (±10%) 19VA
	230V/50-60Hz (±10%) 19VA
	24VDC (± 10%) 18 Watt

	DESCRIPTION	TE025(N-V-T)P / TE025(N-V-T)M
1	Coil - Connector	BH10 V## / V##
2	Screws - Washers	TKITVTE06X18X4
3	Pilot unit	1331080
4	Pilot cover	1251752
5	Remote cover	1251776
6a	Diaphragm spring	3241002
6	Diaphragm (N-V-T)	TKISM025N Neoprene TKISM025V Viton TKISM025T Low temperature
7	Valve body	1251280
8	Conical seal	3301013
9	Retaining ring	1321010
10	Hose clamp high nut	1281045
11	O-R gasket	3301271

V## / V## = 24 Vdc -
24 Vac - 115 Vac - 230 Vac

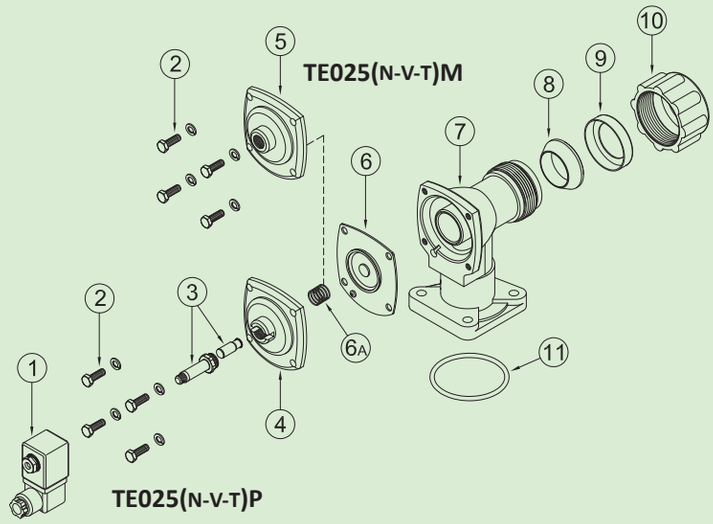

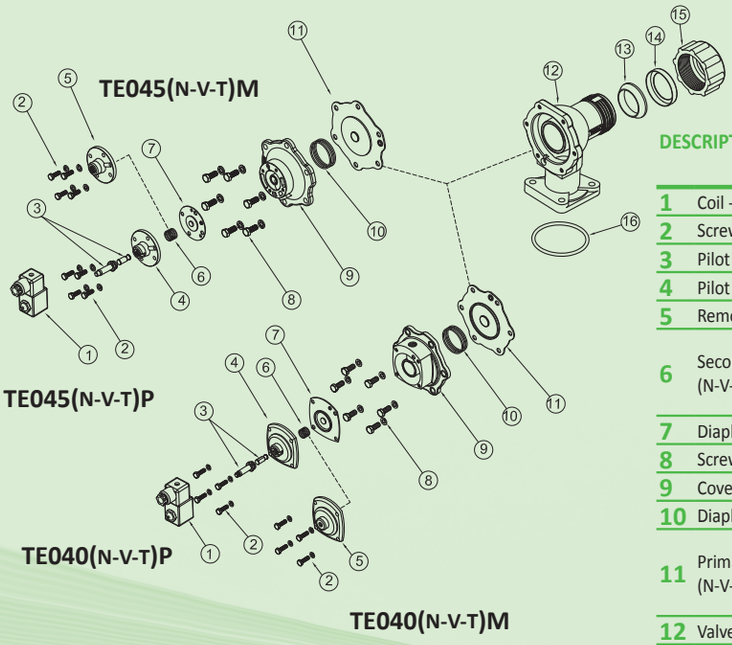

	DESCRIPTION	TE040(N-V-T)P TE040(N-V-T)M	TE045(N-V-T)P TE045(N-V-T)M
1	Coil - Connector	BH10 V## / V##	BH10 V## / V##
2	Screws - Washers	TKITVTE06X20X4	TKITVTE06X18X4
3	Pilot unit	1331080	1331080
4	Pilot cover	1251750	1251715
5	Remote cover	1251770	1251745
6	Secondary diaphragm (N-V-T)	TKISM025N Neoprene TKISM025V Viton TKISM025T Low temperature	TKISM010N Neoprene TKISM010V Viton TKISM010T Low temperature
7	Diaphragm spring	3241002	3241006
8	Screws - Washers	TKITVTE08X20X6	TKITVTE08X20X6
9	Cover	1251620	1251640
10	Diaphragm spring	3241024	3241024
11	Primary diaphragm (N-V-T)	TKISM040N Neoprene TKISM040V Viton TKISM040T Low temperature	TKISM045N Neoprene TKISM045V Viton TKISM045T Low temperature
12	Valve body	1251430	1251430
13	Conical seal	3301017	3301017
14	Retaining ring	1321012	1321012
15	Hose clamp high nut	1281050	1281050
16	O-R gasket	3301281	3301281

Cat_Turbo_2018_Valvole_EN.indd 72 16/01/19 12:13

TE SERIES - Ø 1” - 1½ - OVERALL DIMENSIONS

TE025(N-V-T)P

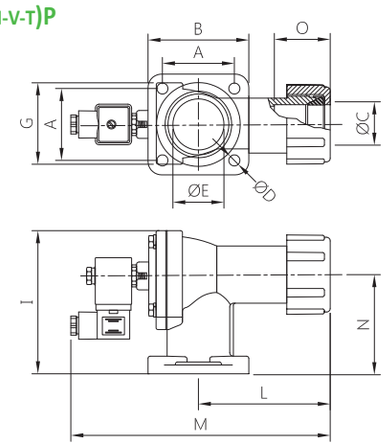

TE025(N-V-T)M

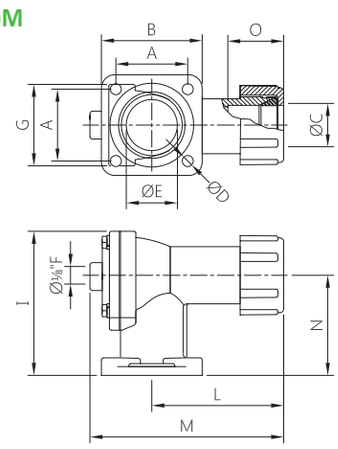

TE040(N-V-T)P

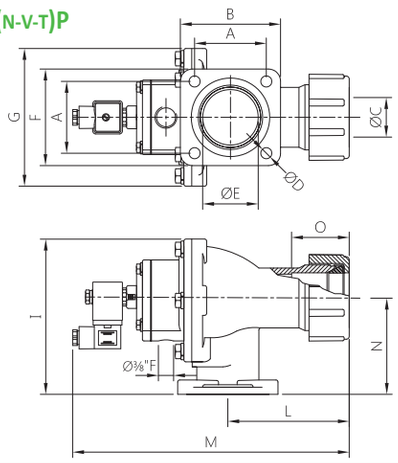

TE040(N-V-T)M

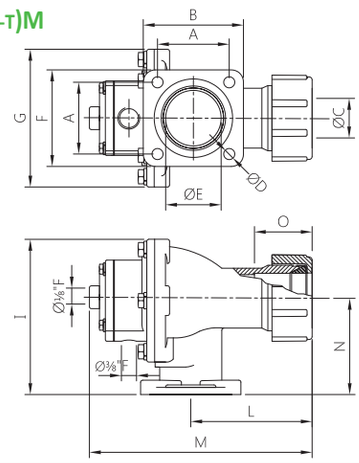

TE045(N-V-T)P

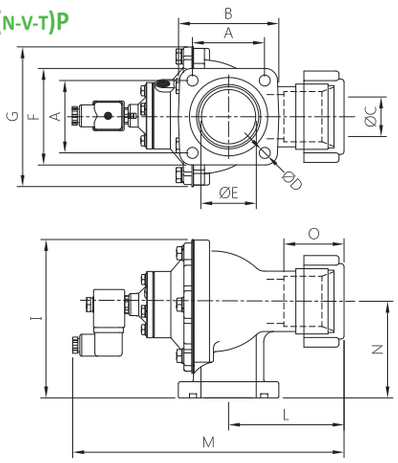

TE045(N-V-T)M

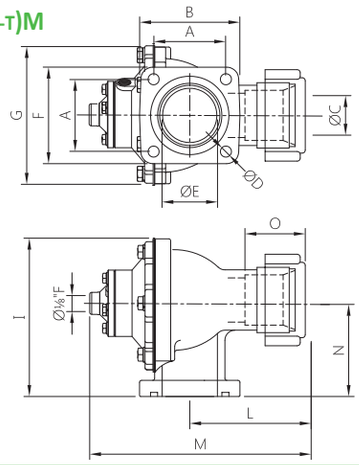

MODEL	Ø L (nom)	A	B	Ø D	F	G	I	L	M	N	Ø E	Weight (kg)
TE025(N-V-T)P	1”	60	82	9	82	74	119	106	217	81	1 ½"	1
TE040(N-V-T)P	1 ½"	72	99	11	96	140	160	115	278	96	2”	2.3
TE045(N-V-T)P	1 ½"	72	99	11	96	140	160	115	270	96	2”	2.3
TE025(N-V-T)M	1”	60	82	9	82	74	119	106	159	81	1 ½"	0.9
TE040(N-V-T)M	1 ½"	72	99	11	96	140	160	115	220	96	2”	2.1
TE045(N-V-T)M	1 ½"	72	99	11	96	140	160	115	214	96	2”	2.1

FLANGED VALVES - TE SERIES - 1 ½”

TEP version with built-in pilot
TEM version with remote pilot

FEATURES	
Fluids	Non-lubricated filtered air
Operating temperature	Neoprene diaphragm -20°C +80°C Viton diaphragm -20°C +200°C Low T. diaphragm -40°C; +80°C
Operating pressure	between 0.5 and 7.5 bar
Body and cover	Die-cast aluminium
Pilot core	Stainless steel
Screws and bolts	Stainless steel
Coil insulation	Class H
Connector	PG 9 EN175301-803
Connector + coil protection	IP65 EN60529
Standard voltage	24V/50-60Hz (±10%) 19VA
	115V/50-60Hz (±10%) 19VA
	230V/50-60Hz (±10%) 19VA
	24VDC (± 10%) 18 Watt

DESCRIPTION		TE041(N-V-T)P / TE041(N-V-T)M
1	Coil - Connector	BH10 V## / V##
2	Screws - Washers	TKITVTE06X20X4
3	Pilot unit	1331080
4	Pilot cover	1251750
5	Remote cover	1251770
6	Secondary diaphragm (N-V-T)	TKISM025N Neoprene TKISM025V Viton TKISM025T Low temperature
6a	Diaphragm spring	3241002
7	Screws - Washers	TKITVTE08X20X6
8	Cover	1251620
9	Diaphragm spring	3241024
10	Primary Diaphragm (N-V-T)	TKISM040N Neoprene TKISM040V Viton TKISM040T Low temperature
11	Valve body	1251425
12	O-R gasket	3301281
13	Rubber sleeve	3361210

V## / V## = 24 Vdc - 24 Vac - 115 Vac - 230 Vac

TE041(N-V-T)M

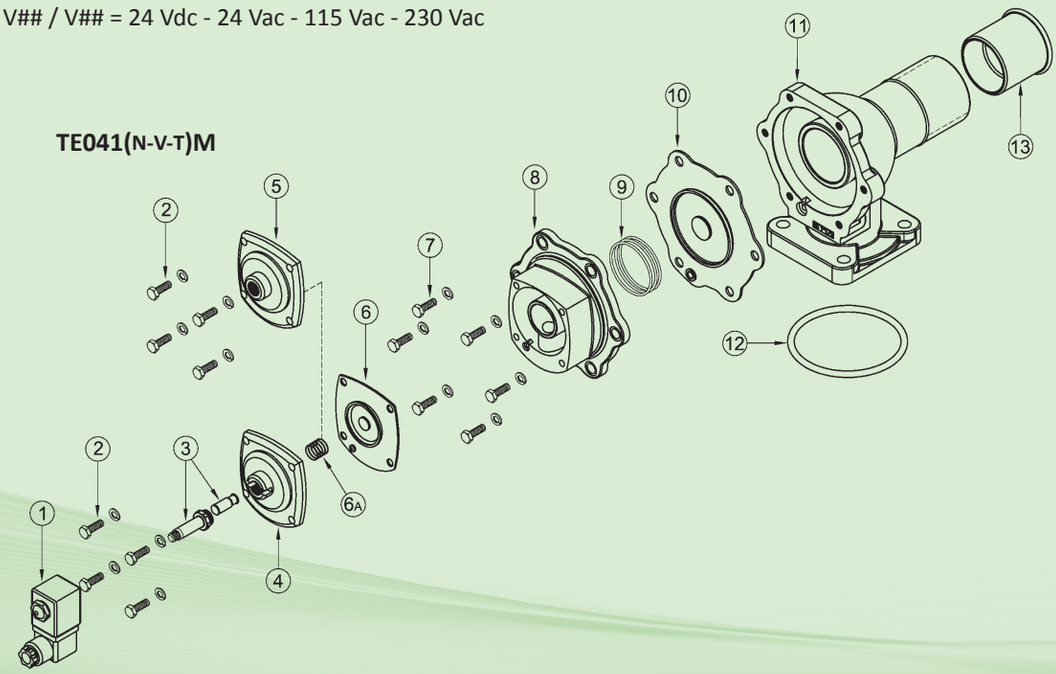

TE041(N-V-T)P

Cat_Turbo_2018_Valvole_EN.indd 74 16/01/19 12:13

TE SERIES - Ø 1” - 1½ - OVERALL DIMENSIONS

TE041(N-V-T)P

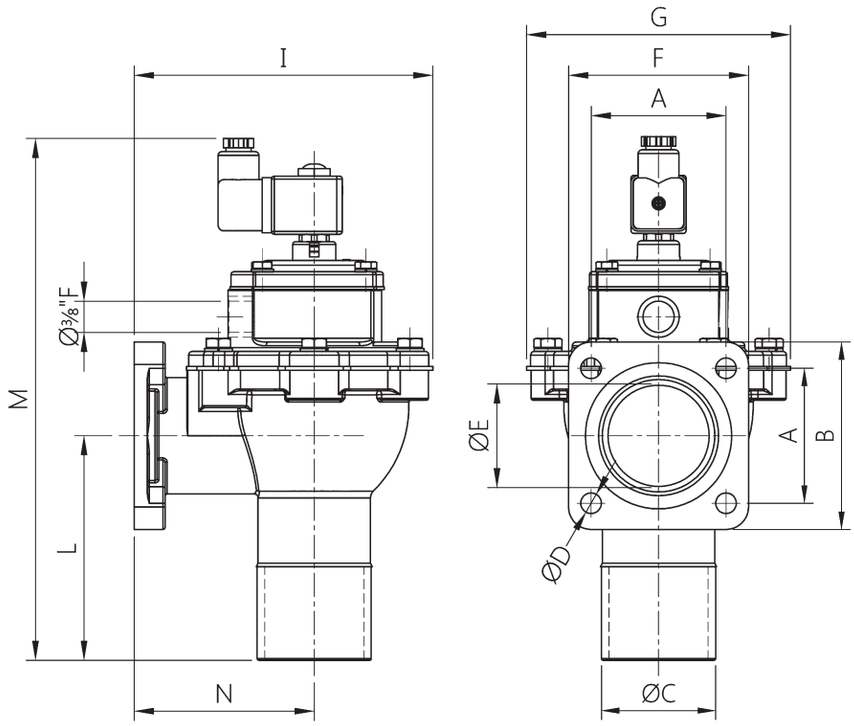

TE041(N-V-T)M

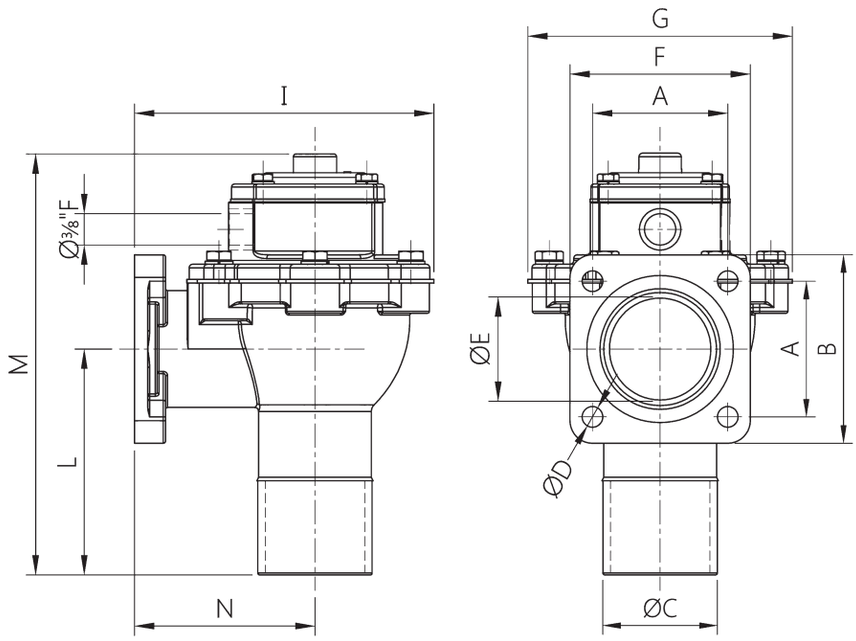

MODEL	ø L (nom)	A	B	Ø C	Ø D	F	G	I	L	M	N	Ø E	Weight (kg)
TE041(N-V-T)P	1 ½”	72	100	61	11	96	140	160	120	279	96	1½”	2.3
TE041(N-V-T)M	1 ½”	72	100	61	11	96	140	160	120	224	96	1½”	2.1

VALVES FOR FLAT SURFACES - TS SERIES - Ø 1”

FEATURES	
Fluids	Non-lubricated filtered air
Operating temperature	Neoprene diaphragm -20°C +80°C Viton diaphragm -20°C +200°C Low T. diaphragm -40°C; +80°C
Operating pressure	between 0.5 and 7.5 bar
Body and cover	Die-cast aluminium
Pilot core	Stainless steel
Screws and bolts	Stainless steel
Coil insulation	Class H
Connector	PG 9 EN175301-803
Connector + coil protection	IP65 EN60529
Standard voltage	24V/50-60Hz (±10%) 19VA
	115V/50-60Hz (±10%) 19VA
	230V/50-60Hz (±10%) 19VA
	24VDC (± 10%) 18 Watt

	DESCRIPTION	TS025(N-V-T)P / TS025(N-V-T)M
1	Coil - Connector	BH10 V## / V##
2	Screws - Washers	TKITVTE06X20X4
3	Pilot unit	1331080
4	Pilot cover	1251750
5	Remote cover	1251770
6a	Diaphragm spring	3241002
6	Diaphragm (N-V-T)	TKISM025N Neoprene TKISM025V Viton TKISM025T Low temperature
7	Valve body	1251290
8	O-R gasket	3301285

TSP version with built-in pilot / TSM version with remote pilot
V## / V## = 24 Vdc - 24 Vac - 115 Vac - 230 Vac

TS025(N-V-T)P

TS025(N-V-T)M

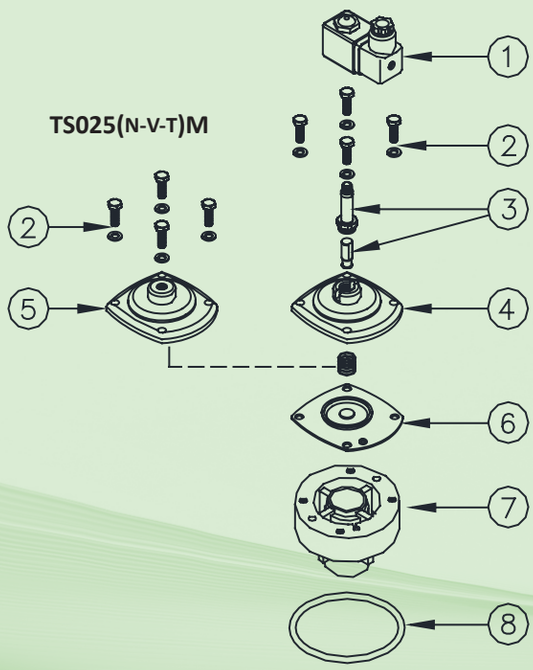

	DESCRIPTION	TS025(N-V-T)PWE / TS025(N-V-T)MWE
1	Coil - Connector	BH10 V## / V##
2	Screws - Washers	TKITVTE06X20X4
3	Pilot unit	1331080
4	Pilot cover	1251750
5	Remote cover	1251770
6a	Diaphragm spring	3241002
6	Diaphragm (N-V-T)	TKISM025N Neoprene TKISM025V Viton TKISM025T Low temperature
7	Screws - Washers	TKITVTE06X16X4
8	Valve body	1251300
9	O-R gasket	3301285

TSP version with built-in pilot / TSM version with remote pilot
V## / V## = 24 Vdc - 24 Vac - 115 Vac - 230 Vac

TS025(N-V-T)PWE

TS025(N-V-T)MWE

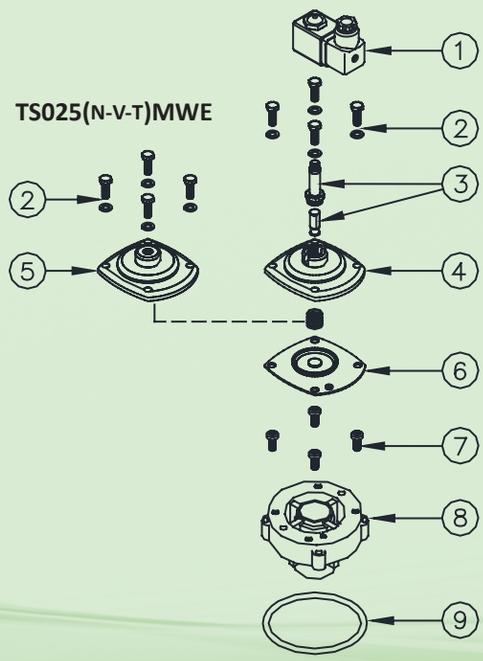

Cat_Turbo_2018_Valvole_EN.indd 76 16/01/19 12:13

TS SERIES - Ø 1”- OVERALL DIMENSIONS

TS025(N-V-T)PWE

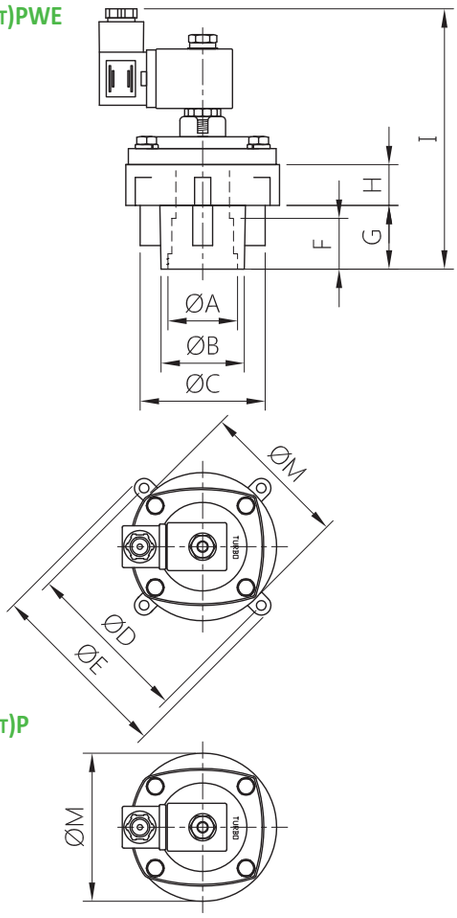

TS025(N-V-T)P

TS025(N-V-T)MWE

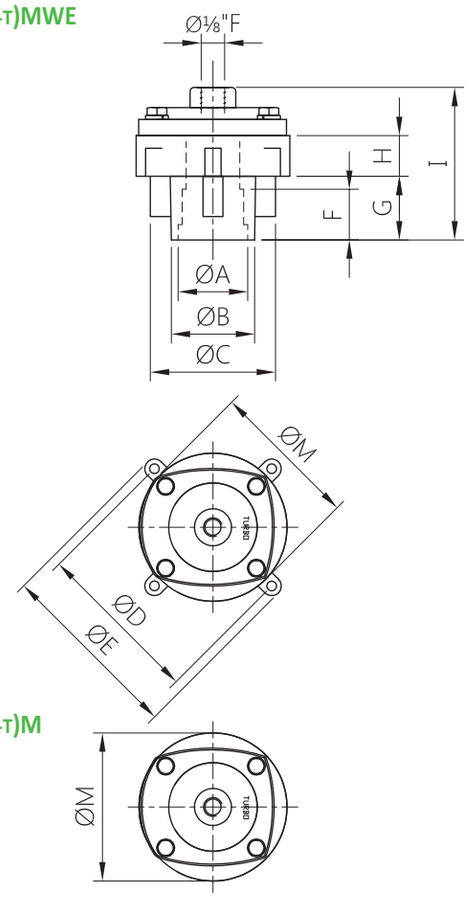

TS025(N-V-T)M

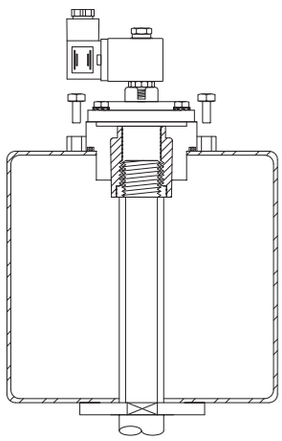

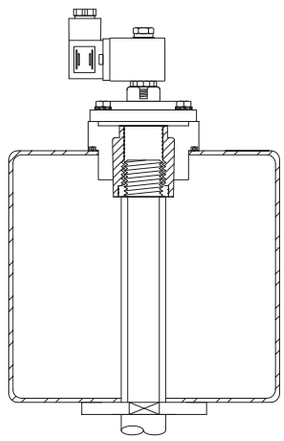

MODEL	ØA	ØB	ØC	Ø D	ØE	ØM	F	G	H	I	L	Weight (kg)
TS025(N-V-T)PWE	1”	41.4	62.2	104	116	92	25	31.5	20.2	136	6.2	0.7
TS025(N-V-T)P	1”	41.4	62.2	-	-	92	25	31.5	20.2	136	6.2	0.7
TS025(N-V-T)MWE	1”	41.4	62.2	104	116	92	25	31.5	20.2	78	6.2	0.5
TS025(N-V-T)M	1”	41.4	62.2	-	-	92	25	31.5	20.2	78	6.2	0.5

Cat_Turbo_2018_Valvole_EN.indd 77 16/01/19 12:13

VALVES FOR FLAT SURFACES - TS SERIES - Ø 1½”

FEATURES	
Fluids	Non-lubricated filtered air
Operating temperature	Neoprene diaphragm -20°C +80°C Viton diaphragm -20°C +200°C Low T. diaphragm -40°C; +80°C
Operating pressure	between 0.5 and 7.5 bar
Body and cover	Die-cast aluminium
Pilot core	Stainless steel
Screws and bolts	Stainless steel
Coil insulation	Class H
Connector	PG 9 EN175301-803
Connector + coil protection	IP65 EN60529
Standard voltage	24V/50-60Hz (±10%) 19VA
	115V/50-60Hz (±10%) 19VA
	230V/50-60Hz (±10%) 19VA
	24VDC (± 10%) 18 Watt

	DESCRIPTION	TS030(N-V-T)P / TS030(N-V-T)M
1	Coil - Connector	BH10 V## / V##
2	Screws - Washers	TKITVTE06X20X6
3	Pilot unit	1331080
4	Pilot cover	1251802
5	Remote cover	1251805
6	Diaphragm spring	3241018
7	Diaphragm (N-V-T)	TKISM030N Neoprene TKISM030V Viton TKISM030T Low temperature
8	Valve body	1251350
9	O-R gasket	3301276

V## / V## = 24 Vdc - 24 Vac - 115 Vac - 230 Vac

TS030(N-V-T)P

TS030(N-V-T)M

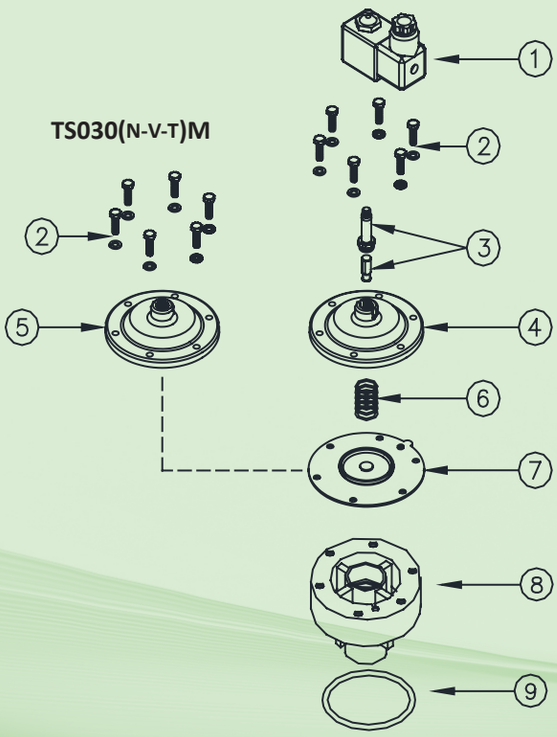

	DESCRIPTION	TS030(N-V-T)PWE / TS030(N-V-T)MWE
1	Coil - Connector	BH10 V## / V##
2	Screws - Washers	TKITVTE06X20X6
3	Pilot unit	1331080
4	Pilot cover	1251802
5	Remote cover	1251805
6	Diaphragm spring	3241018
7	Diaphragm (N-V-T)	TKISM030N Neoprene TKISM030V Viton TKISM030T Low temperature
8	Screws - Washers	TKITVTE06X20X2
9	Valve body	1251370
10	O-R gasket	3301276

V## / V## = 24 Vdc - 24 Vac - 115 Vac - 230 Vac

TS030(N-V-T)PWE

TS030(N-V-T)MWE

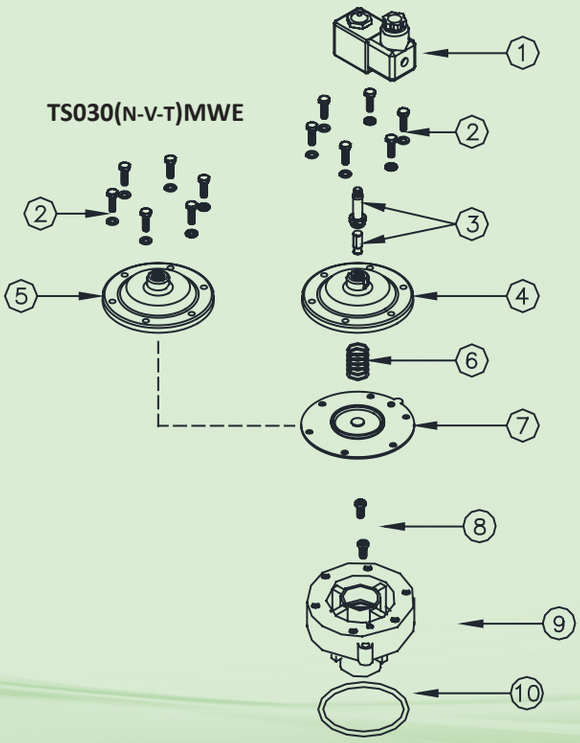

Cat_Turbo_2018_Valvole_EN.indd 78 16/01/19 12:13

TS SERIES - Ø 1½"- OVERALL DIMENSIONS

TS030(N-V-T)PWE

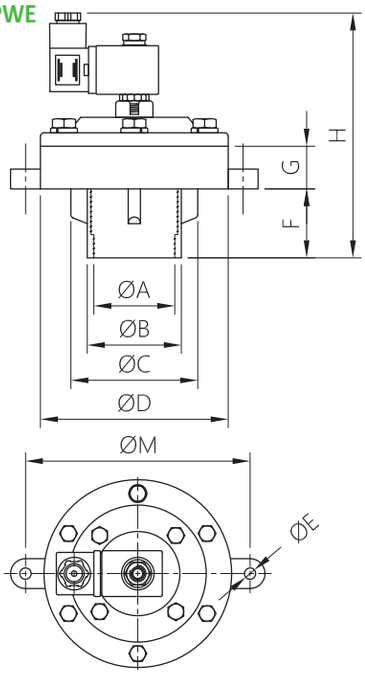

TS030(N-V-T)P

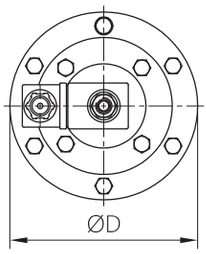

TS030(N-V-T)MWE

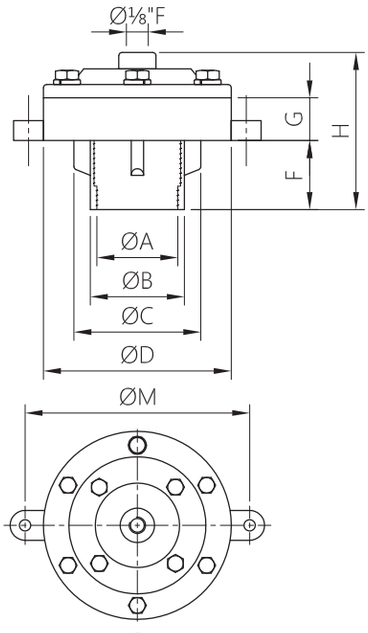

TS030(N-V-T)M

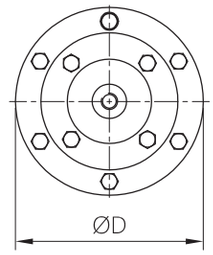

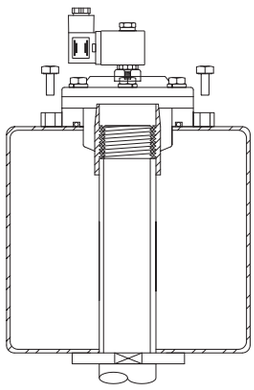

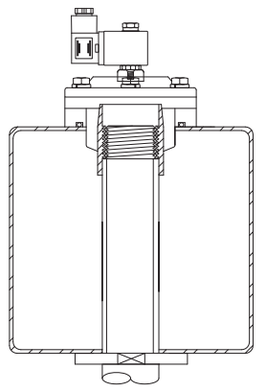

MODEL	ØA	ØB	ØC	Ø D	ØE	F	G	H	M	Weight (kg)
TS030(N-V-T)PWE	1 ½"	57	80.5	114	9	42	26	158	-	1.4
TS030(N-V-T)P	1 ½"	57	80.5	114	9	42	26	158	130	1.4
TS030(N-V-T)MWE	1 ½"	57	80.5	114	9	42	26	125	-	1.2
TS030(N-V-T)M	1 ½"	57	80.5	114	9	42	26	125	130	1.2

VALVES FOR FLAT SURFACES - TS SERIES - Ø 1½”

FEATURES	
Fluids	Non-lubricated filtered air
Operating temperature	Neoprene diaphragm -20°C +80°C Viton diaphragm -20°C +200°C Low T. diaphragm -40°C; +80°C
Operating pressure	between 0.5 and 7.5 bar
Body and cover	Die-cast aluminium
Pilot core	Stainless steel
Screws and bolts	Stainless steel
Coil insulation	Class H
Connector	PG 9 EN175301-803
Connector + coil protection	IP65 EN60529
Standard voltage	24V/50-60Hz (±10%) 19VA
	115V/50-60Hz (±10%) 19VA
	230V/50-60Hz (±10%) 19VA
	24VDC (± 10%) 18 Watt

	DESCRIPTION	TS035(N-V-T)P / TS035(N-V-T)M
1	Coil - Connector	BH10 V## / V##
2	Screws - Washers	TKITVTE06X18X4
3	Pilot unit	1331080
4	Pilot cover	1251720
5	Remote cover	1251740
6	Diaphragm spring	3241006
7	Secondary diaphragm (N-V-T)	TKISM010N Neoprene TKISM010V Viton TKISM010T Low temperature
8	Screws - Washers	TKITVTE06X20X6
9	Cover	1251810
10	Diaphragm spring	3241018
11	Primary Diaphragm (N-V-T)	TKISM035N Neoprene TKISM035V Viton TKISM035T Low temperature
12	Valve body	1251350
13	O-R gasket	3301276

	DESCRIPTION	TS035(N-V-T)PWE / TS035(N-V-T)MWE
1	Coil - Connector	BH10 V## / V##
2	Screws - Washers	TKITVTE06X18X4
3	Pilot unit	1331080
4	Pilot cover	1251720
5	Remote cover	1251740
6	Diaphragm spring	3241006
7	Secondary diaphragm (N-V-T)	TKISM010N Neoprene TKISM010V Viton TKISM010T Low temperature
8	Screws - Washers	TKITVTE06X20X6
9	Cover	1251810
10	Diaphragm spring	3241018
11	Primary Diaphragm (N-V-T)	TKISM035N Neoprene TKISM035V Viton TKISM035T Low temperature
12	Screws - Washers	TKITVTE08X20X2
13	Valve body	1251370
14	O-R gasket	3301276

V## / V## = 24 Vdc - 24 Vac - 115 Vac - 230 Vac

TS035(N-V-T)P

TS035(N-V-T)M

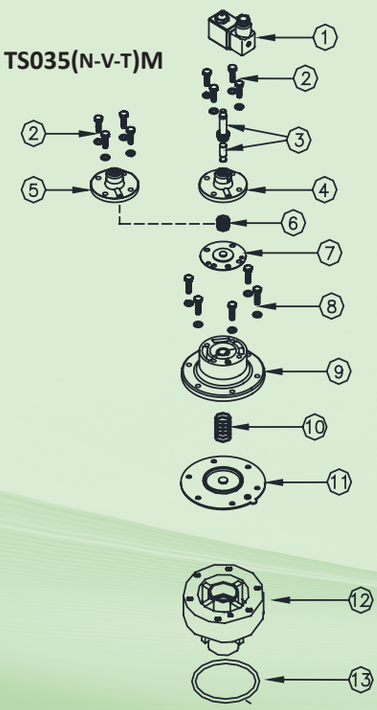

TS035(N-V-T)PWE

TS035(N-V-T)MWE

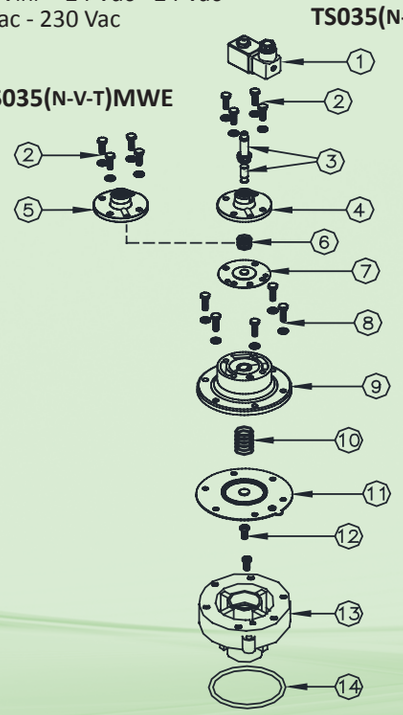

Cat_Turbo_2018_Valvole_EN.indd 80 16/01/19 12:13

TS SERIES - Ø 1½"- OVERALL DIMENSIONS

TS035(N-V-T)PWE

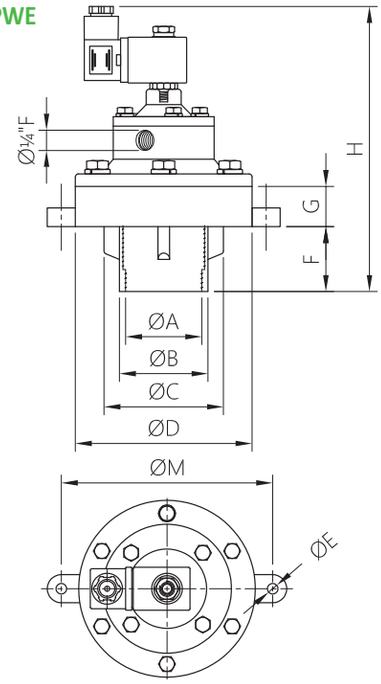

TS035(N-V-T)P

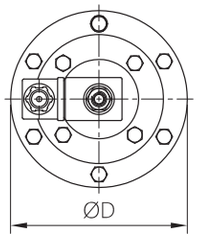

TS035(N-V-T)MWE

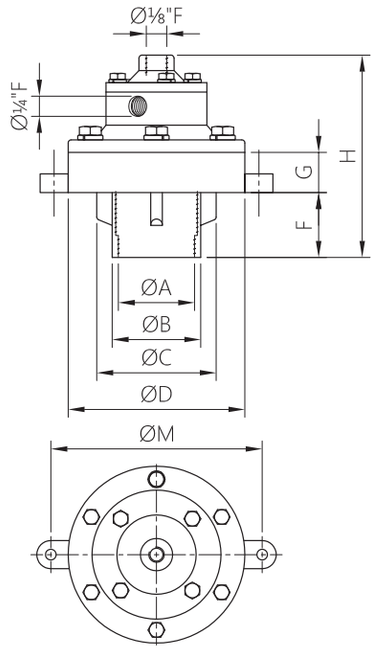

TS035(N-V-T)M

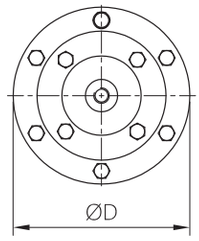

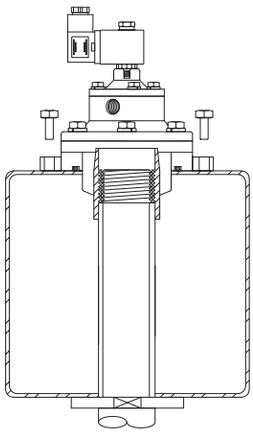

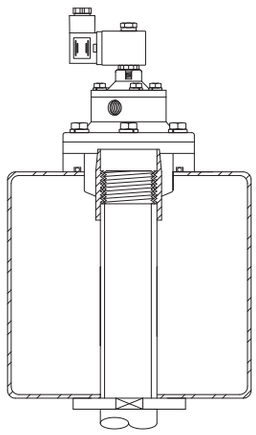

MODEL	ØA	ØB	ØC	Ø D	ØE	F	G	H	M	Weight (kg)
TS035(N-V-T)PWE	1 ½"	57	80.5	114	9	42	26	190	-	1.6
TS035(N-V-T)P	1 ½"	57	80.5	114	9	42	26	190	130	1.6
TS035(N-V-T)MWE	1 ½"	57	80.5	114	9	42	26	135	-	1.4
TS035(N-V-T)M	1 ½"	57	80.5	114	9	42	26	135	130	1.4

VALVES FOR FLAT SURFACES -TS SERIES - ø 2”- 2½” - 3”- 4”

FEATURES	
Fluids	Non-lubricated filtered air
Operating temperature	Neoprene diaphragm -20°C +80°C Viton diaphragm -20°C +200°C Low T. diaphragm -40°C; +80°C
Operating pressure	between 0.5 and 7.5 bar
Body and cover	Die-cast aluminium
Pilot core	Stainless steel
Screws and bolts	Stainless steel
Coil insulation	Class H
Connector	PG 9 EN175301-803
Connector + coil protection	IP65 EN60529
Standard voltage	24V/50-60Hz (±10%) 19VA
	115V/50-60Hz (±10%) 19VA
	230V/50-60Hz (±10%) 19VA
	24VDC (± 10%) 18 Watt

	DESCRIPTION	TS050(N-V-T)P / TS050(N-V-T)M
1	Coil - Connector	BH10 V## / V##
2	Screws - Washers	TKITVTE06X20X4
3	Pilot unit	1331080
4	Pilot cover	1251750
5	Remote cover	1251770
6a	Diaphragm spring	3241002
6	Secondary diaphragm (N-V-T)	TKISM025N Neoprene TKISM025V Viton TKISM025T Low temperature
7	Screws - Washers	TKITVTE10X25X6
8	Cover	1251650
9	Diaphragm spring	3241024
10	Primary Diaphragm (N-V-T)	TKISM050N Neoprene TKISM050V Viton TKISM050T Low temperature
11	Valve body	1251460
12	O-R gasket	3301203

TSP version with built-in pilot / TSM version with remote pilot

V## / V## = 24 Vdc - 24 Vac - 115 Vac - 230 Vac

	DESCRIPTION	TS075(N-V-T)PIN / TS075(N-V-T)MIN
1	Coil - Connector	BH10 V## / V##
2	Screws - Washers	TKITVTE06X20X4
3	Pilot unit	1331080
4	Pilot cover	1251750
5	Remote cover	1251770
6a	Diaphragm spring	3241002
6	Secondary diaphragm (N-V-T)	TKISM025N Neoprene TKISM025V Viton TKISM025T Low temperature
7	Screws - Washers	TKITVTE10X25X6
8	Cover	1251650
9	Diaphragm spring	3241024
10	Primary Diaphragm (N-V-T)	TKISM075N Neoprene TKISM075V Viton TKISM075T Low temperature
11	Valve body	1251540
12	O-R gasket	3301209

TSP version with built-in pilot / TSM version with remote pilot

	DESCRIPTION	TS050(N-V-T)PIN / TS050(N-V-T)MIN
1	Coil - Connector	BH10 V## / V##
2	Screws - Washers	TKITVTE06X20X4
3	Pilot unit	1331080
4	Pilot cover	1251750
5	Remote cover	1251770
6a	Diaphragm spring	3241002
6	Secondary diaphragm (N-V-T)	TKISM025N Neoprene TKISM025V Viton TKISM025T Low temperature
7	Screws - Washers	TKITVTE10X25X6
8	Cover	1251660
9	Diaphragm spring	3241024
10	Primary Diaphragm (N-V-T)	TKISM065N Neoprene TKISM065V Viton TKISM065T Low temperature
11	Valve body	1251520
12	O-R gasket	3301209

TSP version with built-in pilot / TSM version with remote pilot

V## / V## = 24 Vdc - 24 Vac - 115 Vac - 230 Vac

	DESCRIPTION	TS0100(N-V-T)PIN / TS0100(N-V-T)MIN
1	Coil - Connector	BH10 V## / V##
2	Screws - Washers	TKITVTE06X20X4
3	Pilot unit	1331080
4	Pilot cover	1251750
5	Remote cover	1251770
6a	Diaphragm spring	3241002
6	Secondary diaphragm (N-V-T)	TKISM025N Neoprene TKISM025V Viton TKISM025T Low temperature
7	Screws - Washers	TKITVTE10X25X6
8	Cover	1251660
9	Diaphragm spring	3241024
10	Primary Diaphragm (N-V-T)	TKISM0100N Neoprene TKISM0100V Viton TKISM0100T Low temperature
11	Valve body	1251580
12	O-R gasket	3301209

TSP version with built-in pilot / TSM version with remote pilot

Cat_Turbo_2018_Valvole_EN.indd 82 16/01/19 12:13

TS SERIE - ø 2”- 2½” - 3” - 4” - OVERALL DIMENSIONS

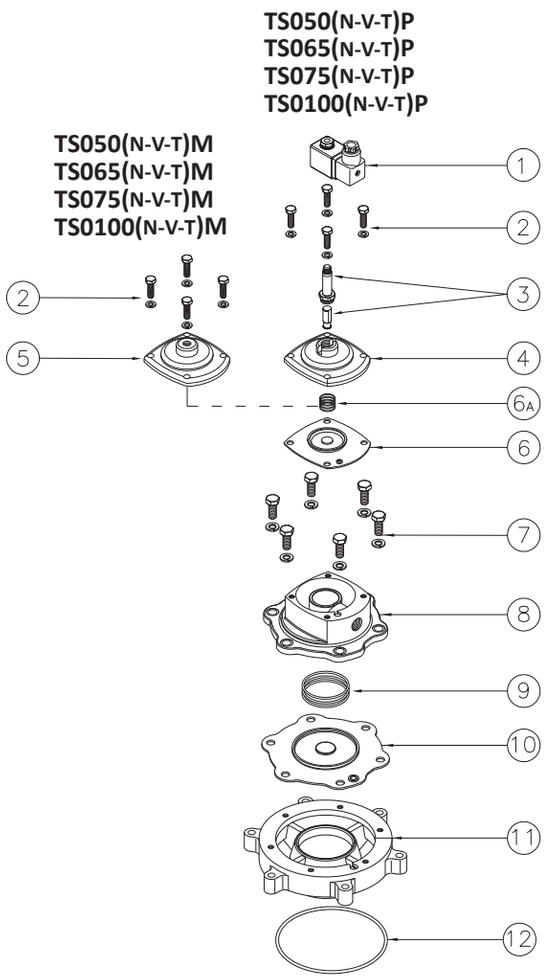

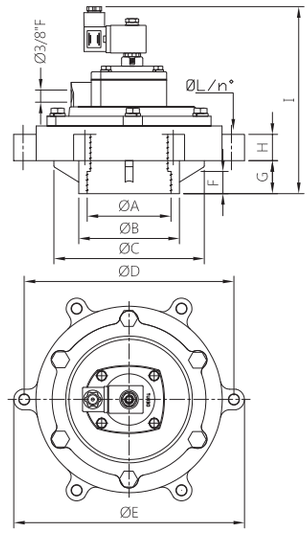

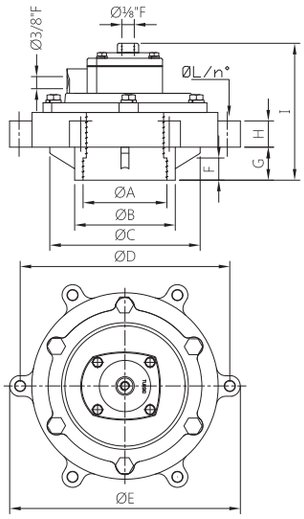

Assembly
TS050(N-V-T)P
TS050(N-V-T)M

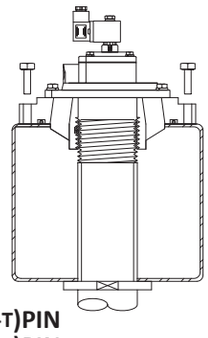

Assembly
TS065(N-V-T)MIN **TS065(N-V-T)PIN**
TS075(N-V-T)MIN **TS075(N-V-T)PIN**
TS0100(N-V-T)MIN **TS0100(N-V-T)PIN**

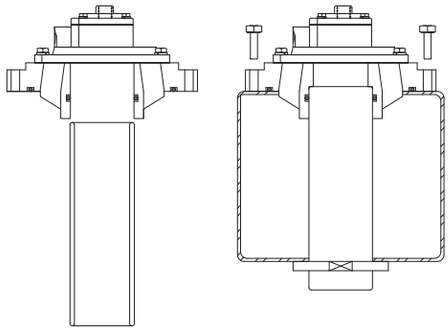

MODEL	ØA	ØB	ØC	Ø D	ØE	F	G	H	I	L	Weight (kg)
TS050(N-V-T)P	2”	83	126	175	195	39	60	20	211	11	2.4
TS065(N-V-T)PIN	2 ½"	107.5	161	225	247	44	35.5	27	205	11	3.9
TS075(N-V-T)PIN	3”	107.5	161	225	247	50	35.5	27	205	11	3.7
TS0100(N-V-T)PIN	4”	119.5	161	225	247	44	35.5	27	205	11	3.8
TS050(N-V-T)M	2”	83	126	175	195	39	60	20	153	11	2.2
TS065(N-V-T)MIN	2 ½"	107.5	161	225	247	44	35.5	27	147	11	3.7
TS075(N-V-T)MIN	3”	107.5	161	225	247	50	35.5	27	147	11	3.5
TS0100(N-V-T)MIN	4”	119.5	161	225	247	44	35.5	27	148	11	3.6

STRAIGHT THROUGH DIAPHRAGM VALVES - TL SERIES - Ø 1”

FEATURES	
Fluids	Non-lubricated filtered air
Operating temperature	Neoprene diaphragm -20°C +80°C Viton diaphragm -20°C +200°C Low T. diaphragm -40°C; +80°C
Operating pressure	between 0.5 and 7.5 bar
Body and cover	Die-cast aluminium
Pilot core	Stainless steel
Screws and bolts	Stainless steel
Coil insulation	Class H
Connector	PG 9 EN175301-803
Connector + coil protection	IP65 EN60529
Standard voltage	24V/50-60Hz (±10%) 19VA
	115V/50-60Hz (±10%) 19VA
	230V/50-60Hz (±10%) 19VA
	24VDC (± 10%) 18 Watt

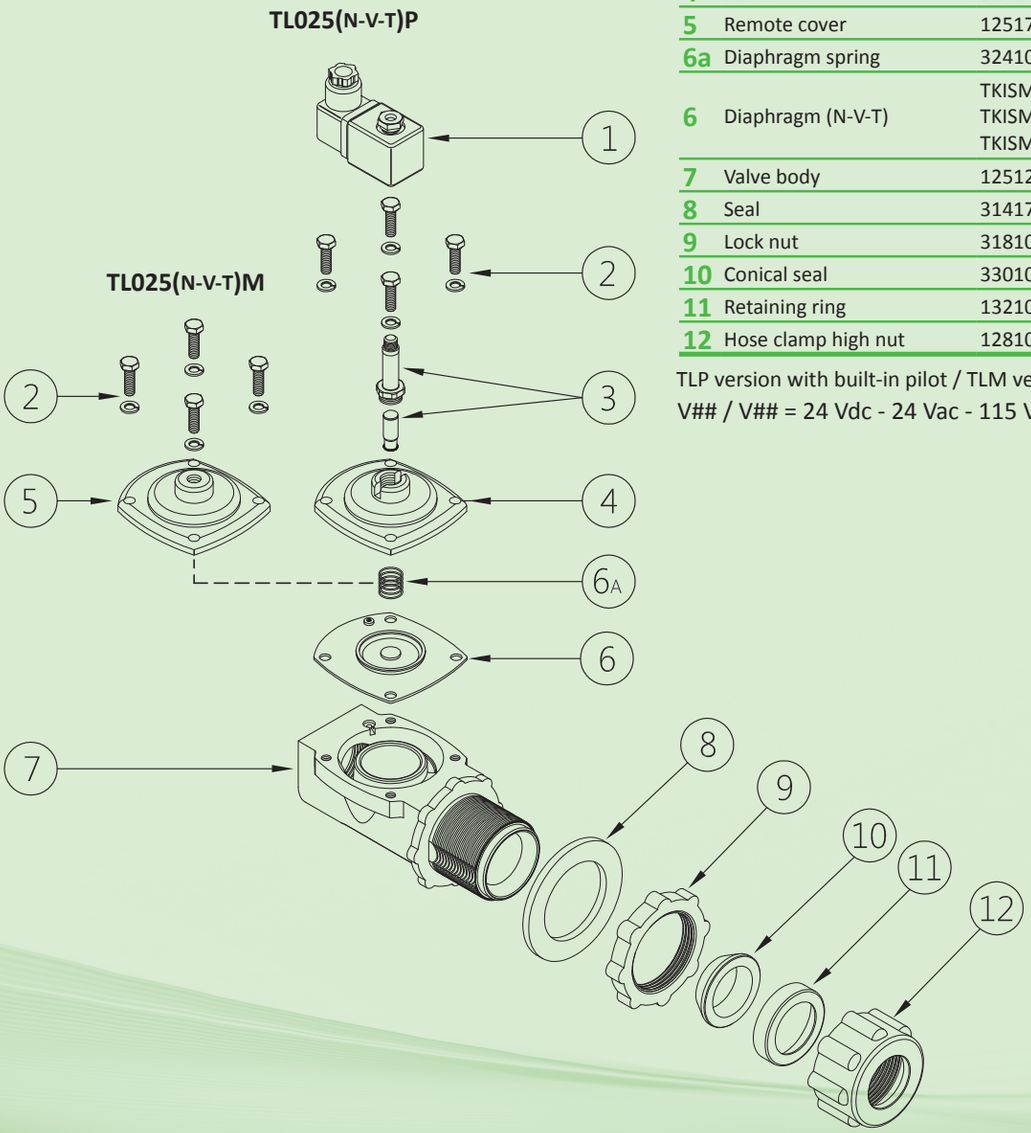

DESCRIPTION		TL025(N-V-T)P / TL025(N-V-T)M
1	Coil - Connector	BH10 V## / V##
2	Screws - Washers	TKITVTE06X20X4
3	Pilot unit	1331080
4	Pilot cover	1251750
5	Remote cover	1251770
6a	Diaphragm spring	3241002
6	Diaphragm (N-V-T)	TKISM025N Neoprene TKISM025V Viton TKISM025T Low temperature
7	Valve body	1251250
8	Seal	3141702
9	Lock nut	3181036
10	Conical seal	3301013
11	Retaining ring	1321010
12	Hose clamp high nut	1281045

TLP version with built-in pilot / TLM version with remote pilot
V## / V## = 24 Vdc - 24 Vac - 115 Vac - 230 Vac

Cat_Turbo_2018_Valvole_EN.indd 84 16/01/19 12:13

TL SERIES - Ø 1”- OVERALL DIMENSIONS

TLP/TLM OUTLET WITH QUICK CONNECTION

TL025(N-V-T)P

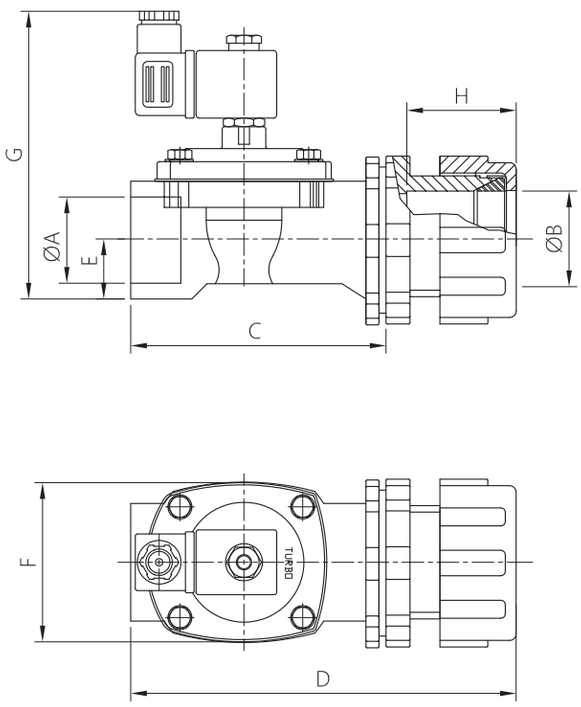

TL025(N-V-T)M

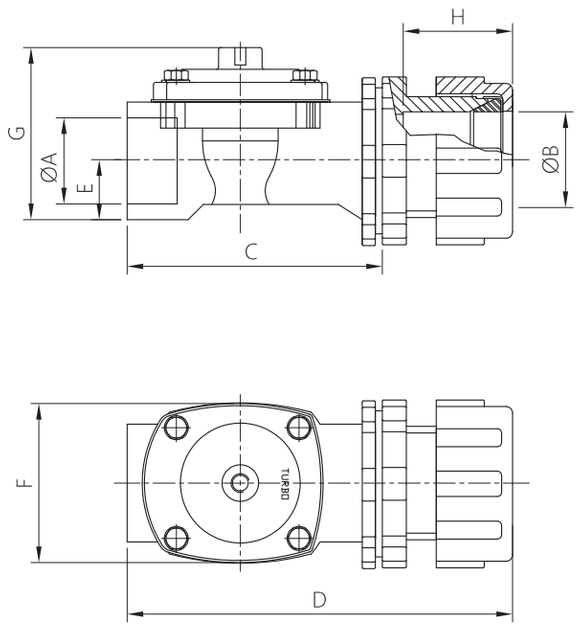

MODEL	ø A	ø B	ø C	ø D	ø E	F	G	M	Weight (kg)
TL025(N-V-T)P	1 ¼"	1”	114	176	27	74	132	49.5	1.2
TL025(N-V-T)M	1 ¼"	1”	114	176	27	79	74	49.5	1

Cat_Turbo_2018_Valvole_EN.indd 85 16/01/19 12:13

STRAIGHT THROUGH DIAPHRAGM VALVES - TL SERIES - Ø 1½”

FEATURES	
Fluids	Non-lubricated filtered air
Operating temperature	Neoprene diaphragm -20°C +80°C Viton diaphragm -20°C +200°C Low T. diaphragm -40°C; +80°C
Operating pressure	between 0.5 and 7.5 bar
Body and cover	Die-cast aluminium
Pilot core	Stainless steel
Screws and bolts	Stainless steel
Coil insulation	Class H
Connector	PG 9 EN175301-803
Connector + coil protection	IP65 EN60529
Standard voltage	24V/50-60Hz (±10%) 19VA
	115V/50-60Hz (±10%) 19VA
	230V/50-60Hz (±10%) 19VA
	24VDC (± 10%) 18 Watt

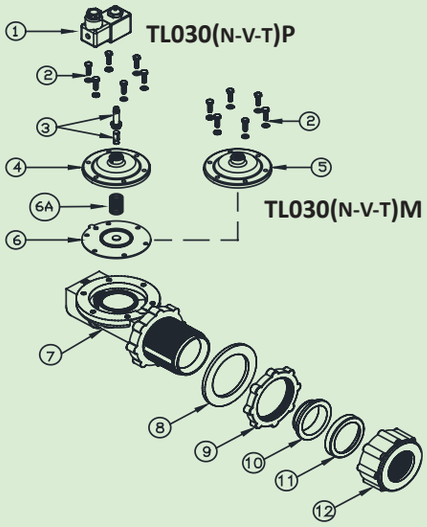

DESCRIPTION		TL030(N-V-T)P / TL030(N-V-T)M
1	Coil - Connector	BH10 V## / V##
2	Screws - Washers	TKITVTE06X20X6
3	Pilot unit	1331080
4	Pilot cover	1251802
5	Remote cover	1251805
6a	Diaphragm spring	3241018
6	Diaphragm (N-V-T)	TKISM030N Neoprene TKISM030V Viton TKISM030T Low temperature
7	Valve body	1251330
8	Seal	3141706
9	Lock nut	3181032
10	Conical seal	3301017
11	Retaining ring	1321012
12	Hose clamp high nut	1281050

TLP version with built-in pilot / TLM version with remote pilot
V## / V## = 24 Vdc - 24 Vac - 115 Vac - 230 Vac

DESCRIPTION		TL035(N-V-T)PWE / TL035(N-V-T)MWE
1	Coil - Connector	BH10 V## / V##
2	Screws - Washers	TKITVTE06X20X4
3	Pilot unit	1331080
4	Pilot cover	1251720
5	Remote cover	1251740
6	Diaphragm spring	3241006
7	Secondary diaphragm (N-V-T)	TKISM010N Neoprene TKISM010V Viton TKISM010T Low temperature
8	Screws - Washers	TKITVTE06X20X6
9	Cover	1251810
10	Diaphragm spring	3241018
11	Primary Diaphragm (N-V-T)	TKISM035N Neoprene TKISM035V Viton TKISM035T Low temperature
12	Valve body	1251330
13	Seal	3141706
14	Lock nut	3181032
15	Conical seal	3301017
16	Retaining ring	1321012
17	Hose clamp high nut	1281050

TLP version with built-in pilot / TLM version with remote pilot
V## / V## = 24 Vdc - 24 Vac - 115 Vac - 230 Vac

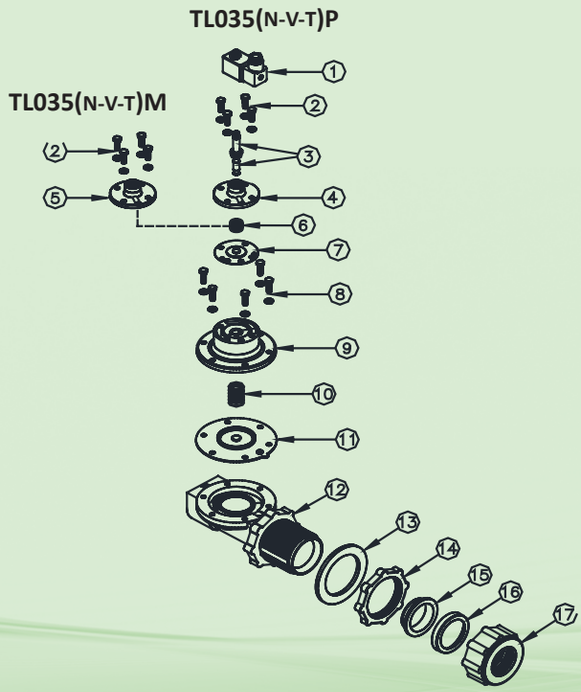

Cat_Turbo_2018_Valvole_EN.indd 86 16/01/19 12:13

TL SERIES - Ø 1½"- OVERALL DIMENSIONS

TL030(N-V-T)P

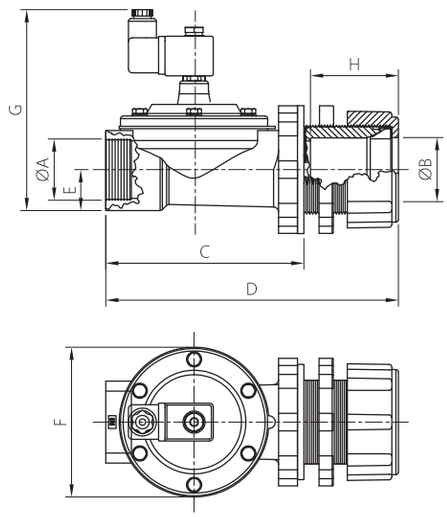

TL030(N-V-T)M

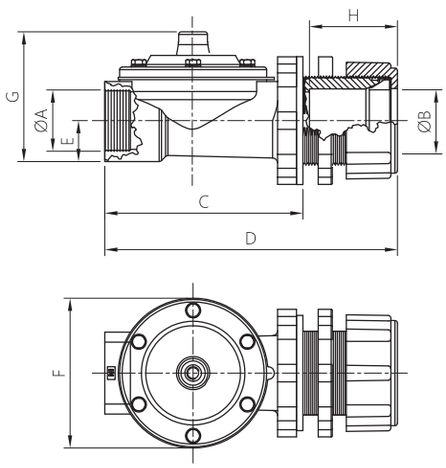

TL035(N-V-T)P

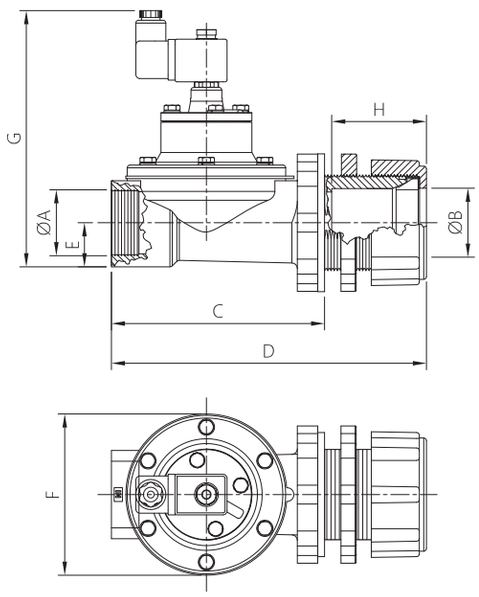

TL035(N-V-T)M

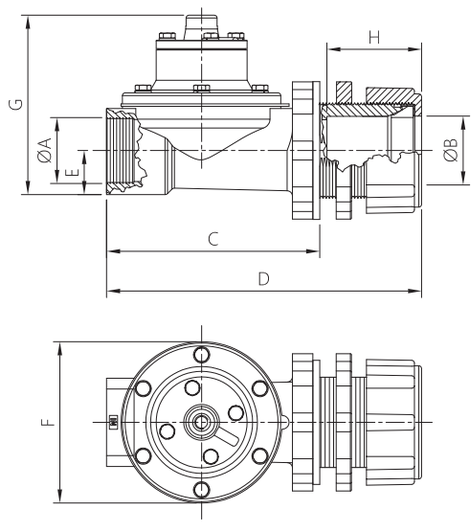

MODEL	ØA	ØB	C	D	E	F	G	H	Weight (kg)
TL030(N-V-T)P	2”	1 ½"	153	228	36	115	148	67.5	2.1
TL030(N-V-T)M	2”	1 ½"	153	228	36	115	93	67.5	1.9
TL035(N-V-T)P	2”	1 ½"	153	228	36	115	186	67.5	2.3
TL035(N-V-T)M	2”	1 ½"	153	228	36	115	131	67.5	2.1

Cat_Turbo_2018_Valvole_EN.indd 87 16/01/19 12:13

FLANGED STRAIGHT THROUGH DIAPHRAGM VALVES - TM SERIES - Ø 1”

FEATURES	
Fluids	Non-lubricated filtered air
Operating temperature	Neoprene diaphragm -20°C +80°C Viton diaphragm -20°C +200°C Low T. diaphragm -40°C; +80°C
Operating pressure	between 0.5 and 7.5 bar
Body and cover	Die-cast aluminium
Pilot core	Stainless steel
Screws and bolts	Stainless steel
Coil insulation	Class H
Connector	PG 9 EN175301-803
Connector + coil protection	IP65 EN60529
Standard voltage	24V/50-60Hz (±10%) 19VA
	115V/50-60Hz (±10%) 19VA
	230V/50-60Hz (±10%) 19VA
	24VDC (± 10%) 18 Watt

TM025(N-V-T)P

TM025(N-V-T)M

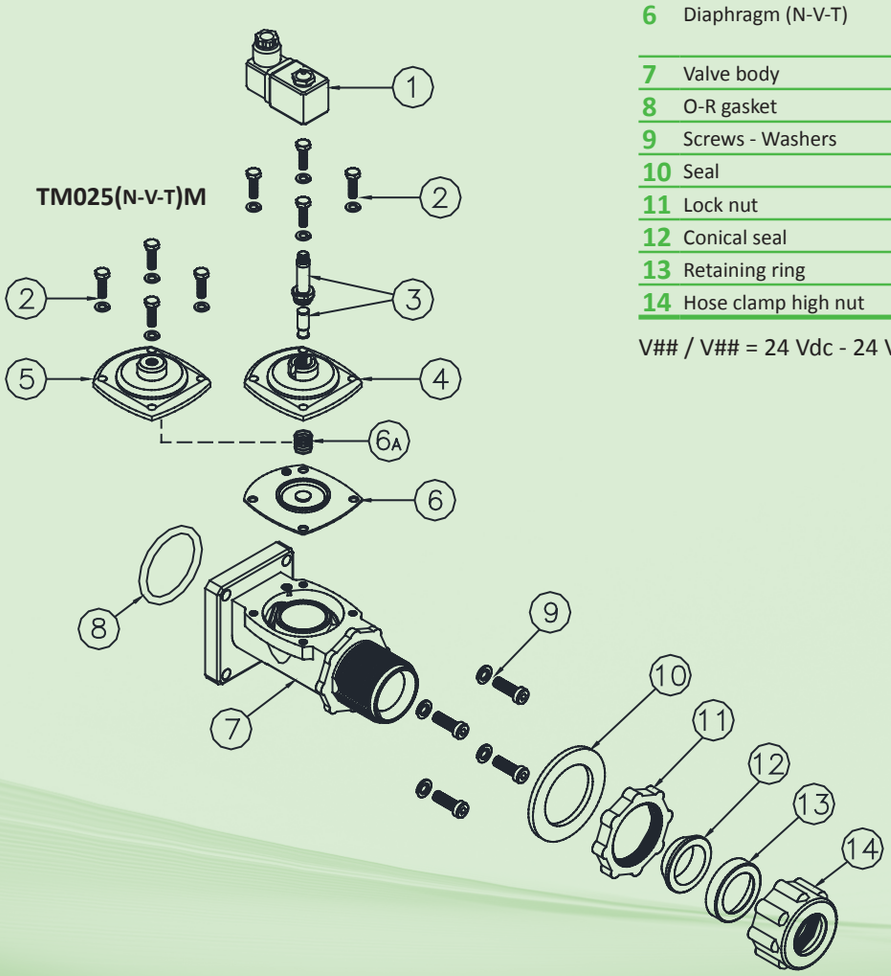

DESCRIPTION		TM025(N-V-T)P / TM025(N-V-T)M
1	Coil - Connector	BH10 V## / V##
2	Screws - Washers	TKITVTE06X20X4
3	Pilot unit	1331080
4	Pilot cover	1251750
5	Remote cover	1251770
6a	Diaphragm spring	3241002
6	Diaphragm (N-V-T)	TKISM025N Neoprene TKISM025V Viton TKISM025T Low temperature
7	Valve body	1251180
8	O-R gasket	3301271
9	Screws - Washers	TKITVTE08X25X4
10	Seal	3141702
11	Lock nut	3181036
12	Conical seal	3301013
13	Retaining ring	1321010
14	Hose clamp high nut	1281045

V## / V## = 24 Vdc - 24 Vac - 115 Vac - 230 Vac

Cat_Turbo_2018_Valvole_EN.indd 88 16/01/19 12:13

TM SERIES - Ø 1”- OVERALL DIMENSIONS

TM025(N-V-T)P

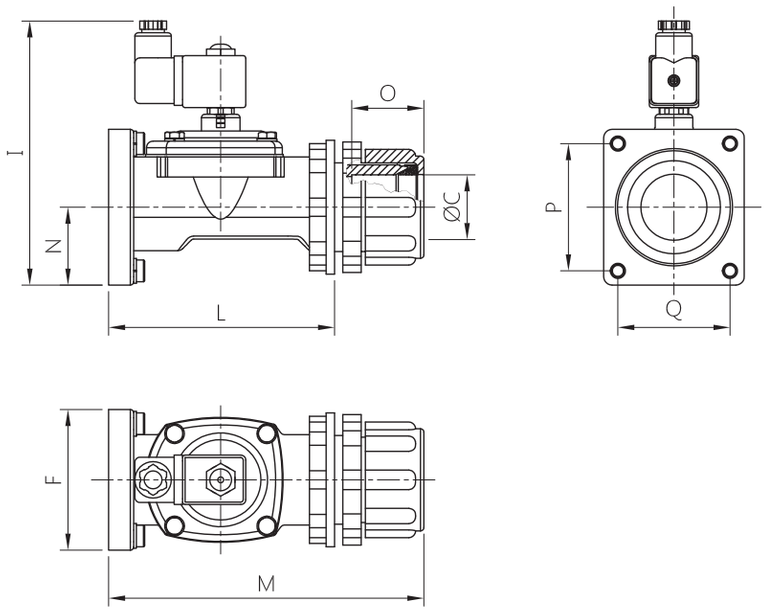

TM025(N-V-T)M

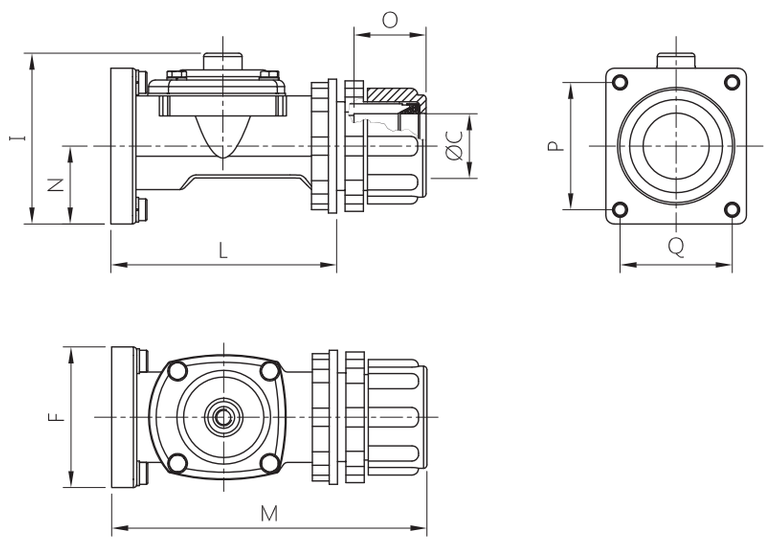

MODEL	Ø C	L	M	N	F	I	O	P	Q
TM025(N-V-T)P	1”	132	185	27	84	158	48.5	76	67
TM025(N-V-T)M	1”	132	185	27	84	102	48.5	76	67

FLANGED STRAIGHT THROUGH DIAPHRAGM VALVES - TM SERIES - Ø 1½”

FEATURES	
Fluids	Non-lubricated filtered air
Operating temperature	Neoprene diaphragm -20°C +80°C Viton diaphragm -20°C +200°C Low T. diaphragm -40°C; +80°C
Operating pressure	between 0.5 and 7.5 bar
Body and cover	Die-cast aluminium
Pilot core	Stainless steel
Screws and bolts	Stainless steel
Coil insulation	Class H
Connector	PG 9 EN175301-803
Connector + coil protection	IP65 EN60529
Standard voltage	24V/50-60Hz (±10%) 19VA
	115V/50-60Hz (±10%) 19VA
	230V/50-60Hz (±10%) 19VA
	24VDC (± 10%) 18 Watt

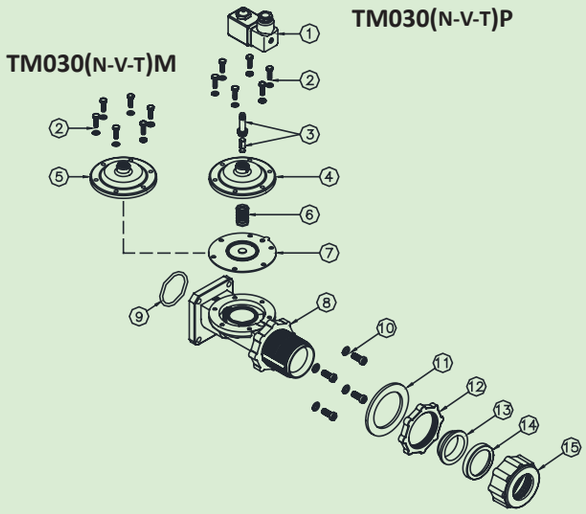

DESCRIPTION		TM030(N-V-T)P / TM030(N-V-T)M
1	Coil - Connector	BH10 V## / V##
2	Screws - Washers	TKITVTE06X20X6
3	Pilot unit	1331080
4	Pilot cover	1251802
5	Remote cover	1251805
6	Diaphragm spring	3241018
7	Diaphragm (N-V-T)	TKISM030N Neoprene TKISM030V Viton TKISM030T Low temperature
8	Valve body	1251320
9	O-R gasket	3301281
10	Screws - Washers	TKITVTE10X25X4
11	Seal	3141706
12	Lock nut	3181032
13	Conical seal	3301017
14	Retaining ring	1321012
15	Hose clamp high nut	1281050

V## / V## = 24 Vdc - 24 Vac - 115 Vac - 230 Vac

DESCRIPTION		TM035(N-V-T)P / TM035(N-V-T)M
1	Coil - Connector	BH10 V## / V##
2	Screws - Washers	TKITVTE06X20X4
3	Pilot unit	1331080
4	Pilot cover	1251720
5	Remote cover	1251740
6	Diaphragm spring	3241006
7	Secondary diaphragm (N-V-T)	TKISM010N Neoprene TKISM010V Viton TKISM010T Low temperature
8	Screws - Washers	TKITVTE06X20X6
9	Cover	1251810
10	Diaphragm spring	3241018
11	Primary Diaphragm (N-V-T)	TKISM035N Neoprene TKISM035V Viton TKISM035T Low temperature
12	Valve body	1251320
13	O-R gasket	3301281
14	Screws - Washers	TKITVTE10X25X4
15	Seal	3141706
16	Lock nut	3181032
17	Conical seal	3301017
18	Retaining ring	1321012
19	Hose clamp high nut	1281050

V## / V## = 24 Vdc - 24 Vac - 115 Vac - 230 Vac

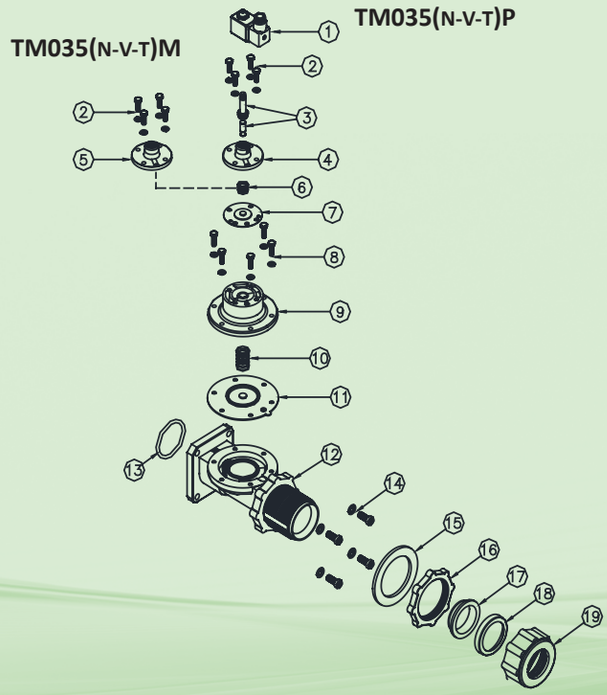

Cat_Turbo_2018_Valvole_EN.indd 90 16/01/19 12:13

TM SERIES - Ø 1½"- OVERALL DIMENSIONS

TM030(N-V-T)P

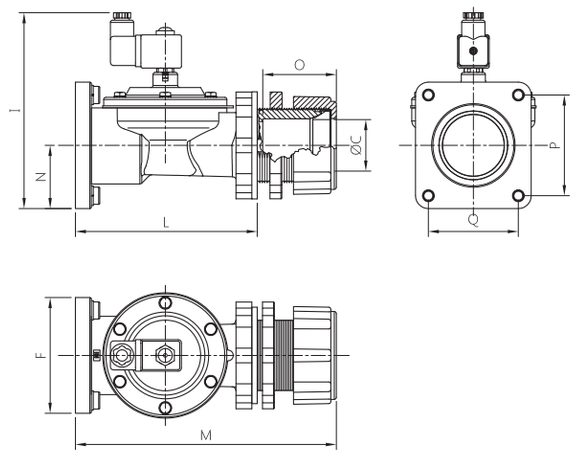

TM030(N-V-T)M

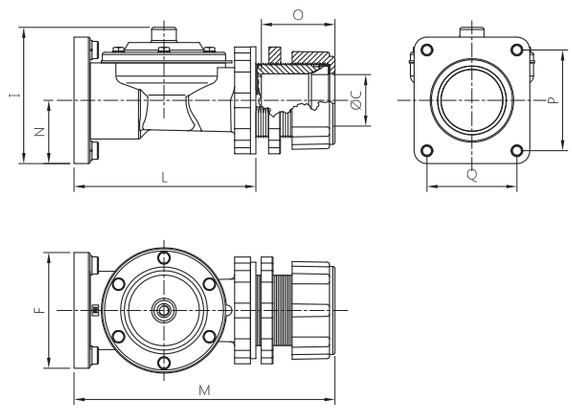

TM035(N-V-T)P

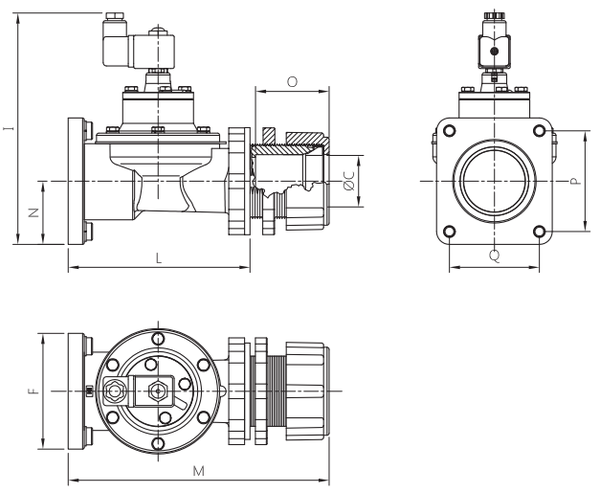

TM035(N-V-T)M

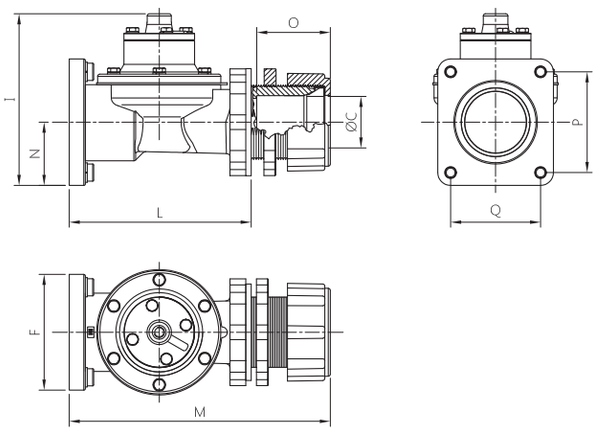

MODEL	ØA	L	M	N	F	I	O	P	Q
TM030(N-V-T)P	1 ½"	168	244	60	108	183	67	94	84
TM030(N-V-T)M	1 ½"	168	244	60	108	127	67	94	84
TM035(N-V-T)P	1 ½"	168	244	60	108	216	67	94	84
TM035(N-V-T)M	1 ½"	168	244	60	108	160	67	94	84

VALVES AND CONNECTORS

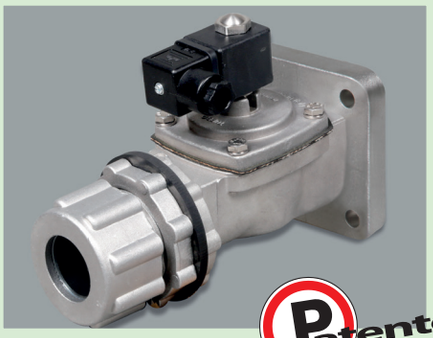

Patented

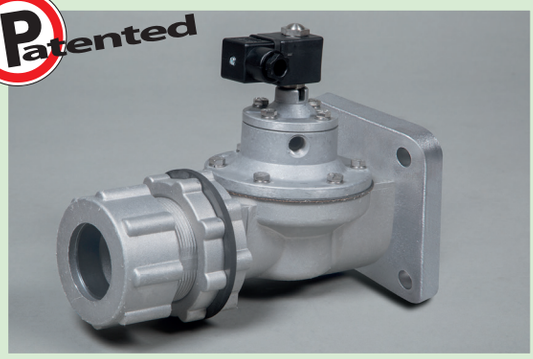

Patented

Cat_Turbo_2018_Valvole_EN.indd 92 16/01/19 12:13

CONNECTORS

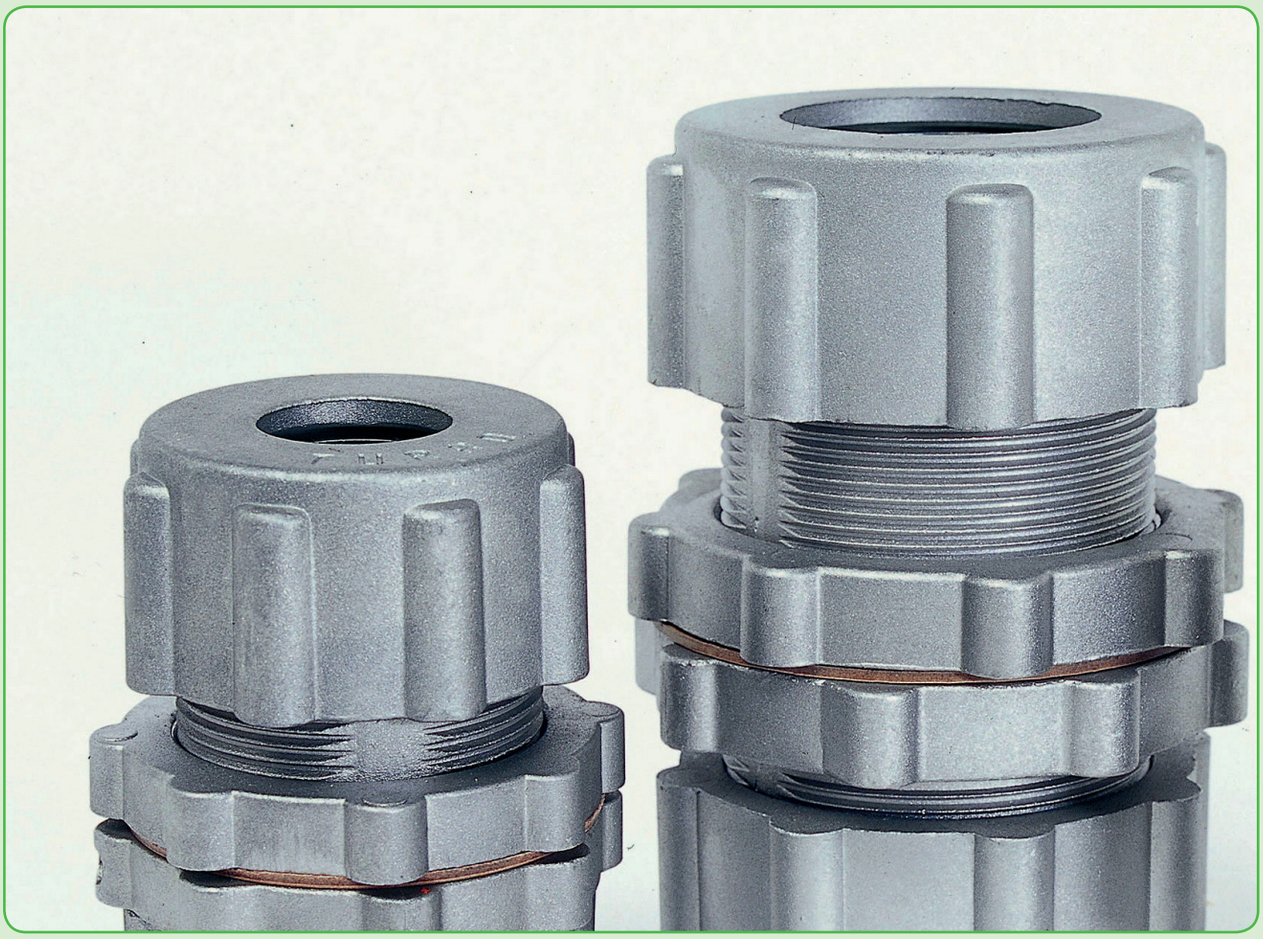

BULKHEAD QUICK CONNECTORS	PS/PD series
MOUNTING KEYS	SG/SD series

Cat_Turbo_2018_Valvole_EN.indd 93 16/01/19 12:13

BULKHEAD QUICK CONNECTORS - PS/PD SERIES - Ø ¾”- 1”- 1½”- 2”

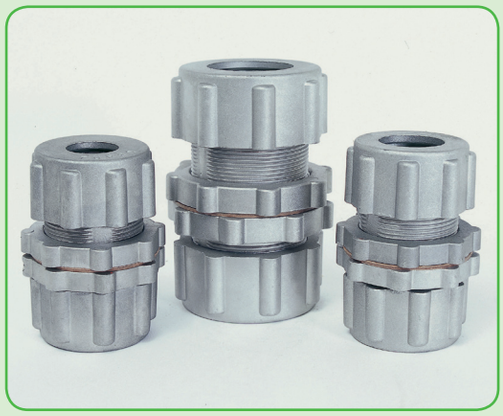

The bulkhead quick connectors are designed to allow air cannons to pass through the filter wall in a simple and rational way, without requiring welds or threaded connectors.

Turbo provides two ranges:

- PD series, used to connect two pipes
- PS series, used for the air cannon

Turbo also provides special keys for fastening nuts and lock nuts.
We recommend using then only in a pneumatic setting.
Do not use as a mechanical support.

DESCRIPTION		PS20	PS25	PS40	PS55
1	Nut	1281040	1281045	1281050	1281055
2	Retaining ring	1321006	1321010	1321012	1321014
3	Conical seal	3301010	3301013	3301017	3301020
4	Lock nut	3181036	3181036	3181032	3181022
5	Fibre gasket	3141529	3141529	3581000	3581014
6	Body	1252022	1252026	1252032	1251052

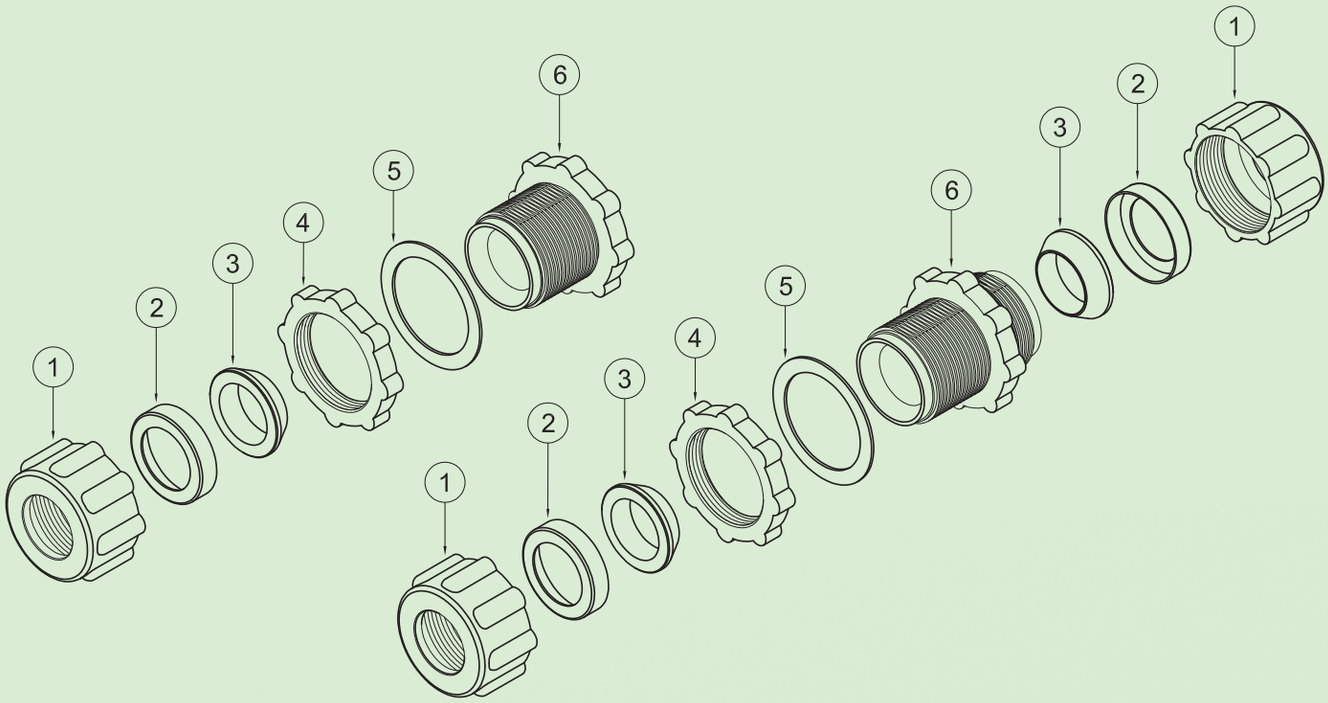

DESCRIPTION		PD20	PD25	PD40	PD55
1	Nut	1281040	1281045	1281050	1281055
2	Retaining ring	1321006	1321010	1321012	1321014
3	Conical seal	3301010	3301013	3301017	3301020
4	Lock nut	3181036	3181036	3181032	3181022
5	Fibre gasket	3141529	3141529	3581000	3581014
6	Body	1252020	1252024	1252028	1252034

Cat_Turbo_2018_Valvole_EN.indd 94 16/01/19 12:13

PS/PD SERIES - Ø ¾”- 1”- 1½”- 2” - OVERALL DIMENSIONS

PS

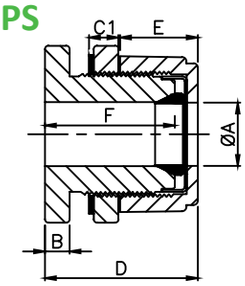

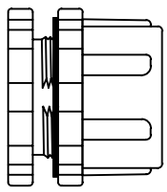

MODEL	ØA	B	C1	D	E	F	Weight (kg)
PS 20	¾ ”	10.5	12.5	67	35	56	0.5
PS 25	1”	10.5	12.5	67	35	56	0.4
PS 40	1 ½"	15	16.5	92	40	79	0.8
PS 55	2”	15	16.5	91	42	80	1

PD

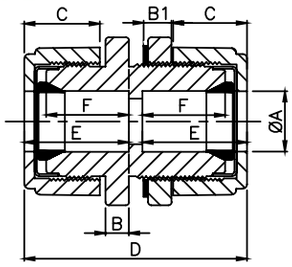

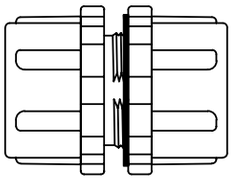

MODEL	ØA	B	B1	C	D	E	F	Weight (kg)
PD 20	¾ ”	10.5	12.5	35	105	50	38	0.7
PD 25	1”	10.5	12.5	35	105	50	38	0.6
PD 40	1 ½"	15	16.5	40	140	67	55	1.2
PD 55	2”	15	16.5	42	142	55	66	1.4

TECHNICAL FEATURES		
Body, lock nut, nuts	Die-cast aluminium	
Seals	NBR	-30°C / +100°C
	Silicone	-60°C / +200°C
Bulkhead connector assembly	3/4”	hole in wall min. diam.: 56
	1”	hole in wall min. diam.: 56
	1” 1/2	hole in wall min. diam.: 72
	2”	hole in wall min. diam.: 84

MOUNTING KEYS - SG/SD SERIES

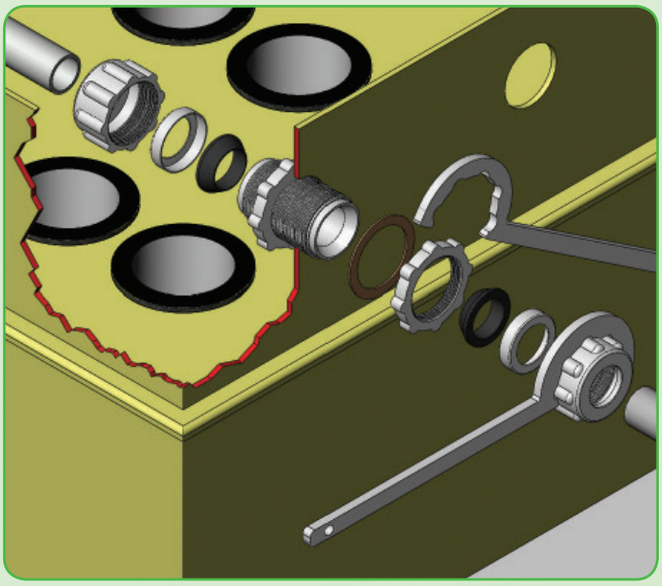

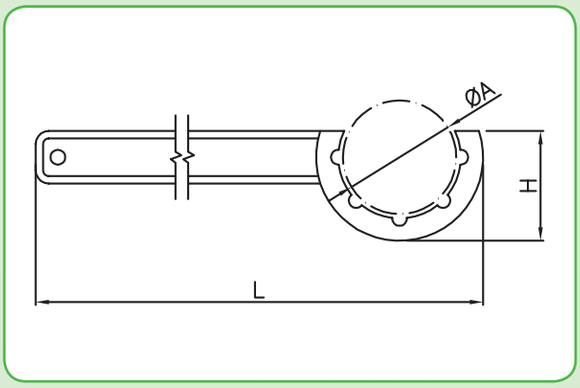

NUT LOCKING KEY SD SERIES

MODEL	Ø	A	H	L
SD 20	¾ ”	61	70	350
SD 25	1”	61	70	350
SD 40	1 ½"	82	85	410
SD 55	2”	98	90	420

LOCK NUT LOCKING KEY SG SERIES

MODEL	Ø	A	H	L
SG 20	¾ ”	70	65	350
SG 25	1”	70	65	350
SG 40	1 ½"	90	85	410
SG 55	2”	103	90	420

PILOT ENCLOSURE

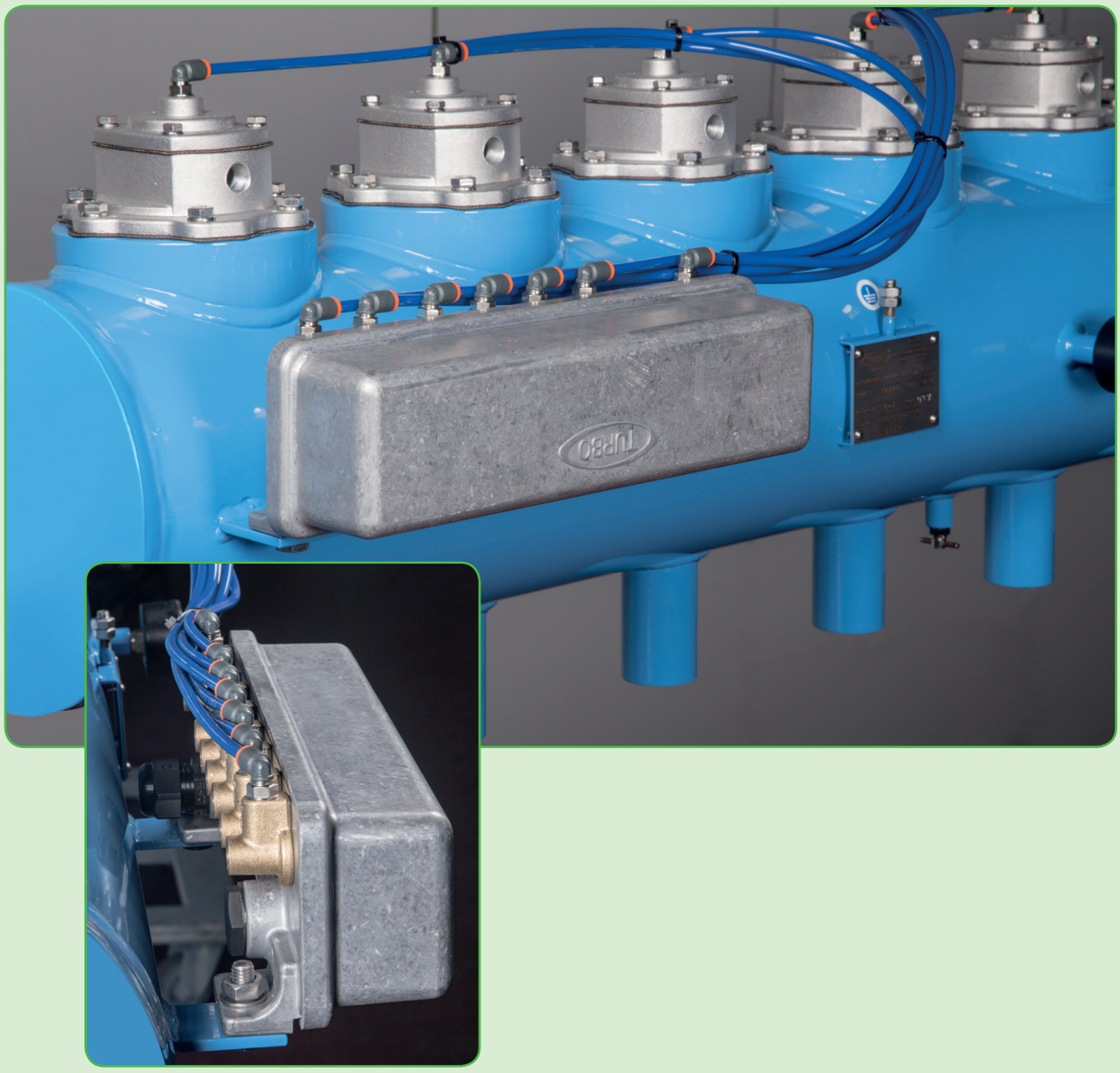

RCP series
RLD series
REP series

Cat_Turbo_2018_Valvole_EN.indd 96 16/01/19 12:14

CONFORMING REMOTE PILOT ENCLOSURE

ATEX II 3D T100°C
IP66 NEMA 4 UL50

The airtight pilot enclosures (protection rating IP66) allow the remote control of diaphragm valves.

Available in the following versions:

- RCP for short distances (approx. 3 m)
- RLD for long distances (approx. 10 m)

The valves are pneumatically connected to the enclosure by means of a 6 or 8 mm rislan pipe.
The RCP and RLD enclosures are provided with precabled common terminals.
The ERCP enclosure provides for the full electrical connection of all the coils to the printed circuit board inside.

Self-regulating thermistors for heating are available for cold and humid climates to ensure a temperature of 5°C inside the enclosure.

example RCP 5 V/... 00/22 R

RCP: IP 66 AIRTIGHT ENCLOSURE
RLD: IP 66 AIRTIGHT ENCLOSURE
ERCP: IP 66 AIRTIGHT ENCLOSURE
REP: EXPLOSION-PROOF ENCLOSURE

NUMBER OF PILOTS INSTALLED
RCP 1-2-3-4-5 (Small enclosure)
RCP 6-7-8 (medium enclosure)
RCP 9-10-11-12 (large enclosure)
ERCP 1-2-3-4-5-6-7-8 (medium enclosure)

OUTPUT
24V/50-60Hz = 02450
115V/50-60Hz = 11050
230V/50-60Hz= 22050
24VDC = 024DC
(ERCP = 024DC - 12W)

00 standard version
Zone 22 ATEX Certification

PTC self-adjusting heating element
Power supply 12 / 48 Vac / Vdc
Power supply 115 / 230 Vac

The code RCP5V/...R represents an IP 66 airtight enclosure (RCP) with five electric pilots installed (5) powered by a 24V 50Hz voltage (V/..) with self-adjusting thermistor (R).

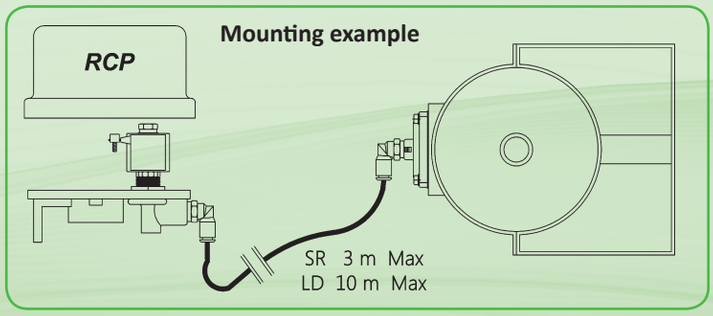

Cat_Turbo_2018_Valvole_EN.indd 97 16/01/19 12:14

REMOTE PILOT ENCLOSURE - RCP SERIES

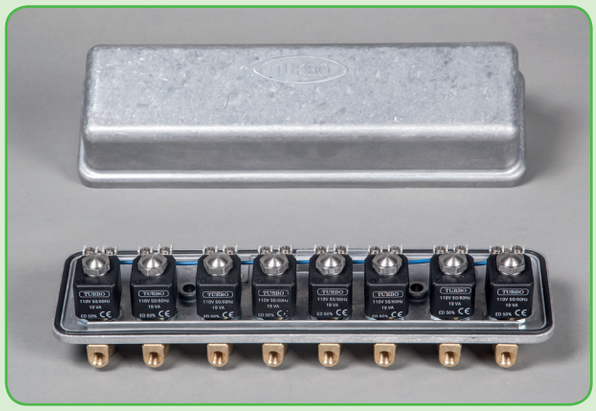

FEATURES	
Fluids	Non-lubricated filtered air
Operating pressure	between 0.5 and 7.5 bar
Operating temperature	-20°C; +80°C
with heating element	-40°C +80°C
Cover and base	Die-cast aluminium
Pilot core	Stainless steel
Screws and bolts	Stainless steel
Coil insulation	Class H
Protection	IP66
Standard voltage	230 -110 - 24V
	50-60 Hz 19 VA
	24VDC 15W
Maximum Valve Distance	3 Metres

(*) Clearance for opening the cover

RCP5

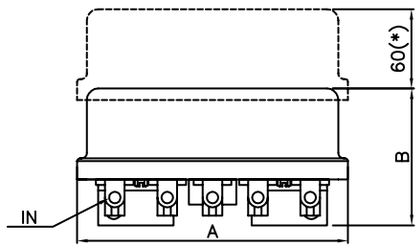

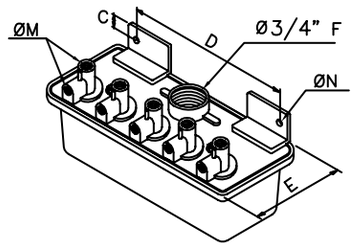

RCP8

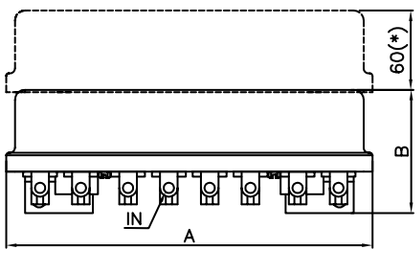

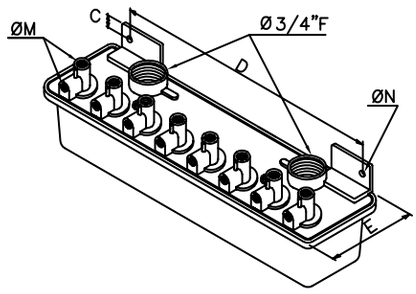

RCP12

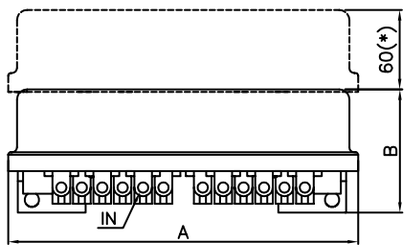

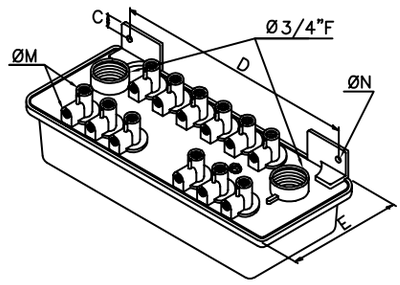

MODEL	A	B	C	D	E	ØM	ØN	Weight (kg)
RCP5	210	98	10	156	100	⅛ ”	11	1.7
RCP8	333	98	10	267	100	⅛ ”	11	3.2
RCP12	306	97	10	237	152	⅛ ”	11	4.4

Cat_Turbo_2018_Valvole_EN.indd 98 16/01/19 12:14

REMOTE PILOT ENCLOSURE - RLD SERIES

FEATURES	
Fluids	Non-lubricated filtered air
Operating pressure	between 0.5 and 7.5 bar
Operating temperature	-20°C; +80°C
with heating element	-40°C +80°C
Cover and base	Die-cast aluminium
Pilot core	Stainless steel
Screws and bolts	Stainless steel
Coil insulation	Class H
Protection	IP66
Standard voltage	230 -110 - 24V
	50-60 Hz 19 VA
	24VDC 15W
Maximum Valve Distance	10 Metres

(*) Clearance for opening the cover

RLD5

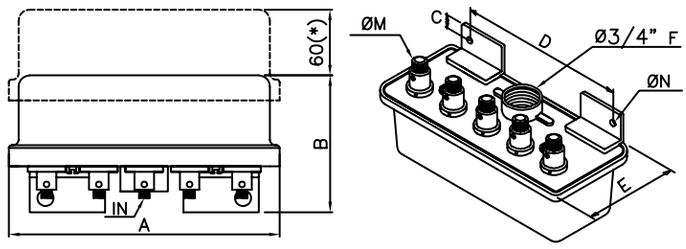

RLD8

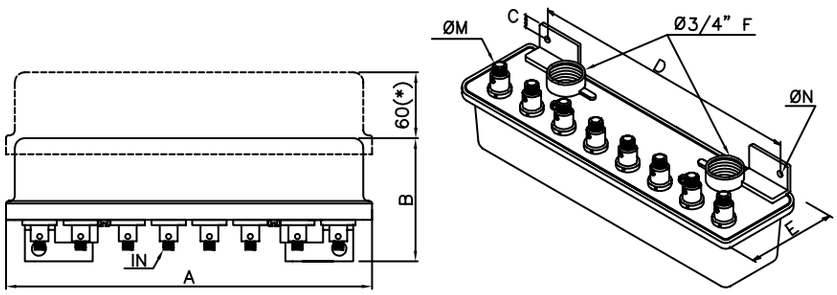

RLD12

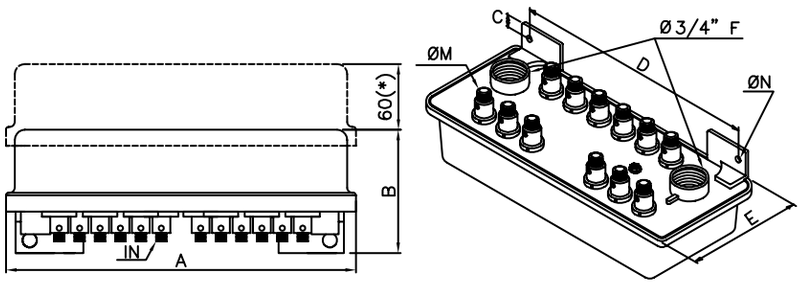

MODEL	A	B	C	D	E	ØM	ØN	Weight (kg)
RLD5	210	98	10	156	100	¼ "	11	1.7
RLD8	333	98	10	267	100	¼ "	11	3.2
RLD12	306	97	10	237	152	¼ "	11	4.4

REP ANTI-EXPLOSION REMOTE PILOTS ENCLOSURE

Pilots enclosure for remote control of the pneumatic diaphragm valves for dust collector plants, intended for areas that are hazardous due to the atmosphere at risk of explosion. Casing in non-painted die-cast aluminium, suitable as anti-explosion and for flames, available on request with anti-condensate heater.

The heater self-adjusting thermistor, prevents the series of pilots from freezing at low temperatures, thus allowing operation to -40°C.

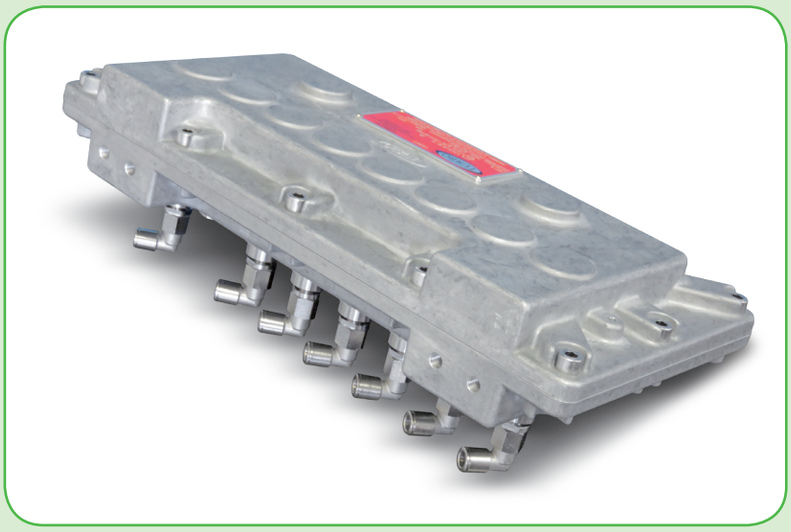

FEATURES	
Solenoid Valves Pilots	From 1 to 8
Cable glands from ¾" NPT	From 1 to 4
Operating temperature	-40°C +80°C
Operating Pressure	Maximum Applicable To the Pilot Unit 8 Bar
Solenoid Coil For Pilot	12 VDC - 23 W
	24 VDC - 12 W
	24 VDC - 20 W
	24 VAC - 19 VA
	48 VAC - 19 VA
	110 VAC - 19 VA
	230 VAC - 19 VA
Heating Element	12 - 48 VDC
	12 - 48 VAC
	110 VAC 50W
	230 VAC 50W
Seals	Silicon Rubber - Shore Hardness A3 75 -Tensile Strength Mpa 7.2 - Temperature Range -60°C to +200°C
Free Air Internal Volume	2333 cm^3
Protection rating	IP 6x
Weight	Con n°. 2 Pilots - 7 Kg / Con n°. 4 Pilots - 7.3 Kg / Con n°. 6 Pilots - 7.6 Kg / Con n°. 8 Pilots - 7.9 Kg

Cat_Turbo_2018_Valvole_EN.indd 100 16/01/19 12:14

REP ANTI-EXPLOSION REMOTE PILOTS ENCLOSURE

NORMATIVE	
ATEX	CEI EN 60070-31 - IEC 60070-31:2013 - CEI EN 60079-0 - CEI EN 60079-1
IECEx	CEI EN 60070-31 - IEC 60070-31:2013 - IEC 60079-0:2011 - IEC 60079-1:2014

	GAS		DUST	
Category	2		2	
Type of protection	db		tb	
Group	IIB		IIIC	
Temperature Code. for maximum surface temperature	T4		T135°C	
Temperature Code. for maximum surface temperature with heating element	T4		T135°C	
Protection rating of the EPL equipment	Gb		Db	

REP

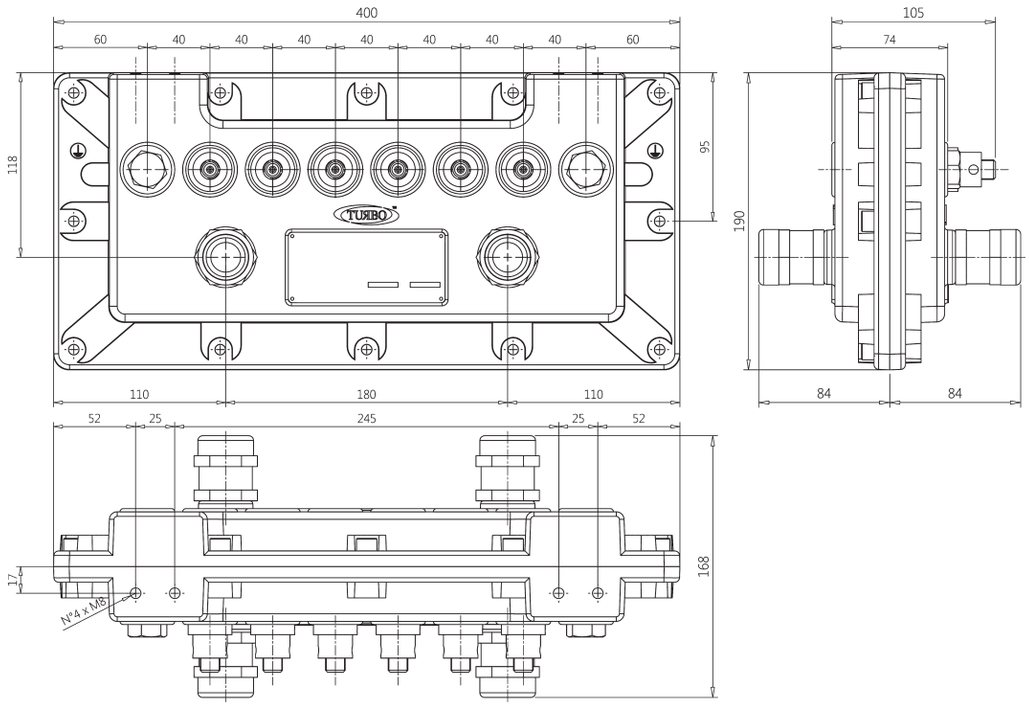

Cat_Turbo_2018_Valvole_EN.indd 101 16/01/19 12:14

HOW TO ORDER

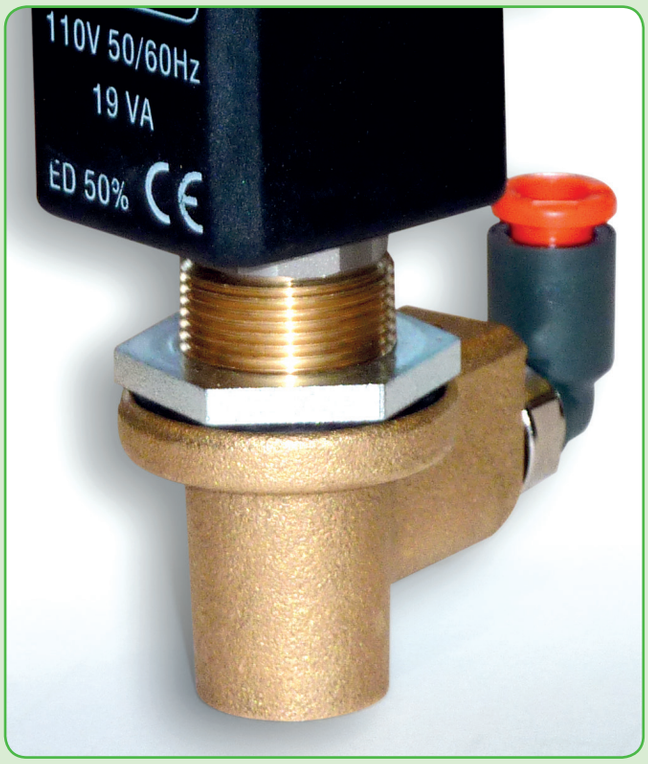

REMOTE PILOT FOR DIAPHRAGM VALVES

Turbo provides two types of pilots for the remote control of diaphragm valves:

- SR/ESRM series, for distances up to 3 m.
- LD series, for distances up to 10 m.

The pneumatic connection occurs by means of a 6 or 8 mm rislan pipe.
The dimensions and voltages available are listed below.

E1	SR series
ESRM	ESRM series (*)
E2	LD series

(*) ESRM for pilot enclosure connected to the Econet system

example SRM 02450

SRC:	SINGLE PILOT WITH CONNECTOR
SRM:	SINGLE PILOT WITH TERMINALS
ESRM:	SINGLE PILOT WITH FASTON CONNECTION
LDC:	SINGLE PILOT WITH CONNECTOR
LDM:	SINGLE PILOT WITH TERMINALS

OUTPUT

24V/50-60Hz =	02450
115V/50-60Hz =	11050
230V/50-60Hz=	22050
24VDC =	024DC

(ESRM = 024DC - 12W)

The code SRM02450 represents a single pilot with terminals (SRM) powered by a 24 V 50 Hz voltage (02450).

Cat_Turbo_2018_Valvole_EN.indd 102 16/01/19 12:14

REMOTE PILOT FOR DIAPHRAGM VALVES-SR SERIES

FEATURES	
Fluids	Non-lubricated filtered air
Operating pressure	between 0.5 and 7.5 bar
Operating temperature	-20°C; +80°C
Body	Brass
Pilot core	Stainless steel
Coil insulation	Class H
Connector	PG9 / IP 65
Standard voltage	230 -110 - 24V/50-60 Hz (19 VA)
	24VDC (15W) - 24VDC (12W)
Maximum Valve Distance	3 Metres

SRC - IP65

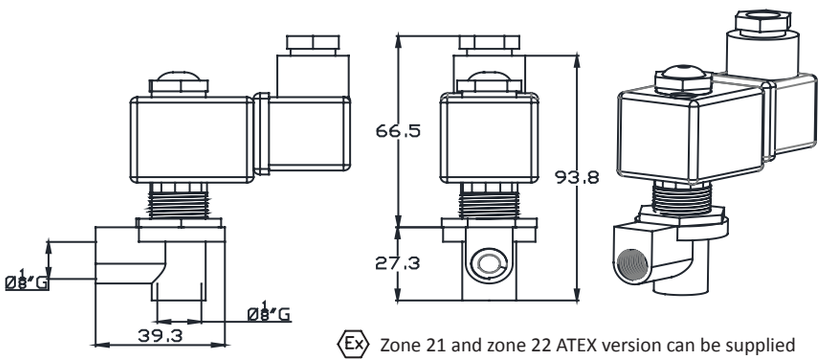

Ex Zone 21 and zone 22 ATEX version can be supplied

SRM - IP00

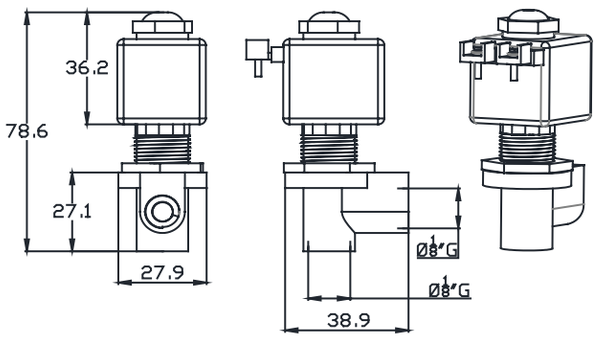

MOUNTING EXAMPLE

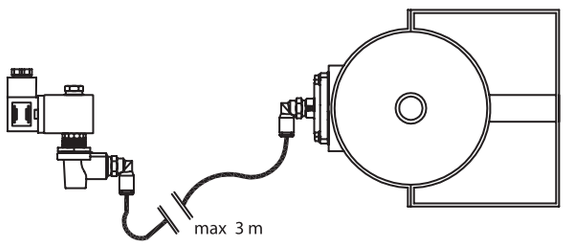

SRSERIES - REMOTE PILOT FOR DIAPHRAGM VALVES

SRC

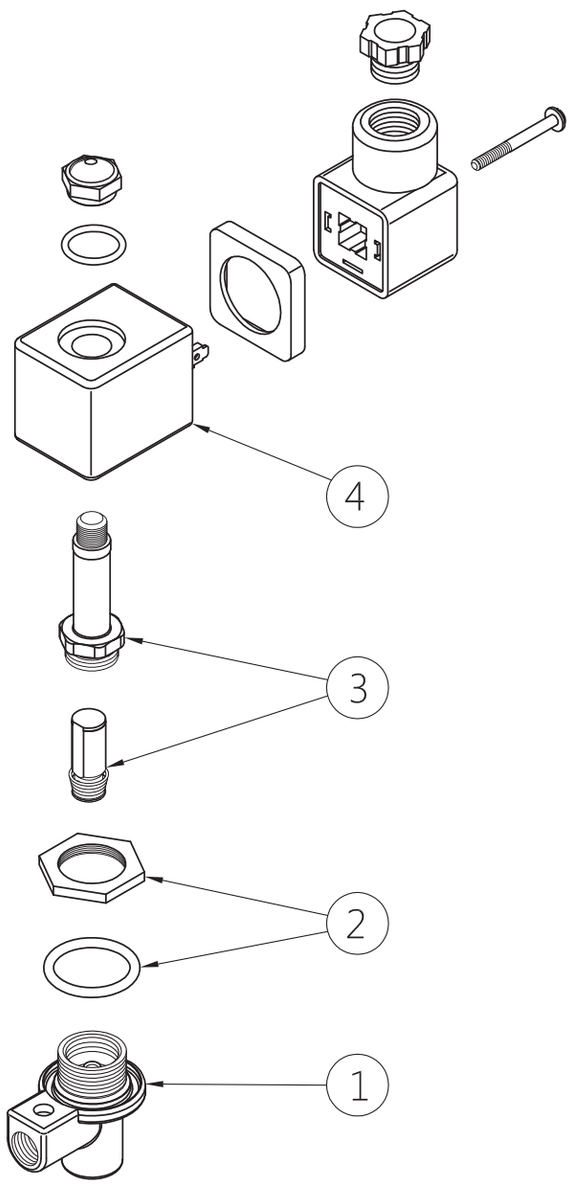

SRM

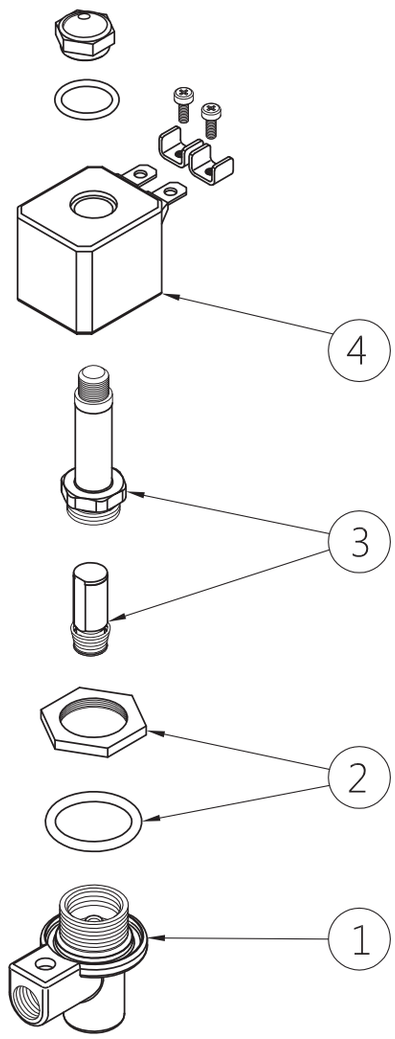

DESCRIPTION		SRC
1	Pilot body	PCRP
2	Second lock nut + O-ring	3121604 + 3301224
3	Pilot unit	1331088
4	Coil + Connector	BH10

DESCRIPTION		SRM
1	Pilot body	PCRP
2	Second lock nut + O-ring	3121604 + 3301224
3	Pilot unit	1331088
4	Coil	BH10.../.. - A9

Cat_Turbo_2018_Valvole_EN.indd 104 16/01/19 12:14

REMOTE PILOT FOR DIAPHRAGM VALVES- LD SERIES

LONG-DISTANCE ACTIVATION

FEATURES	
Fluids	Non-lubricated filtered air
Operating pressure	between 0.5 and 7.5 bar
Operating temperature	-20°C; +80°C
Body	Brass
Pilot core	Stainless steel
Coil insulation	Class H
Connector	PG9 / IP 65
Standard voltage	230 -110 - 24V/50-60 Hz (19 VA)
	24VDC (15W)
Maximum Valve Distance	10 Metres

LDC

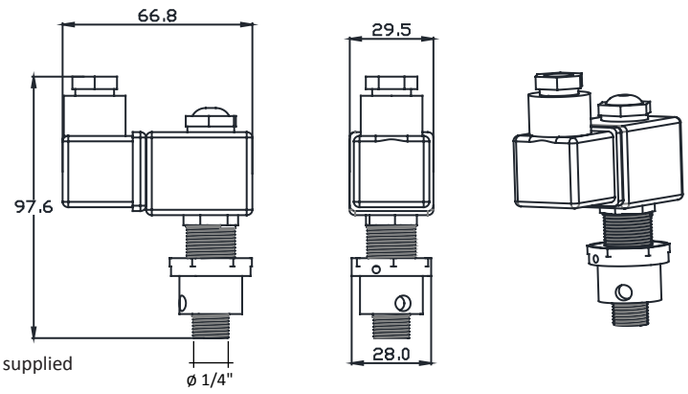

Ex Zone 21 and zone 22 ATEX version can be supplied

LDM

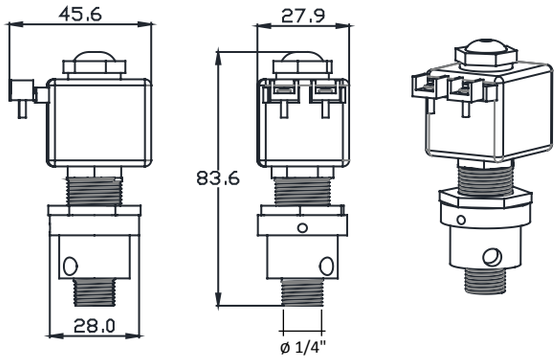

MOUNTING EXAMPLE

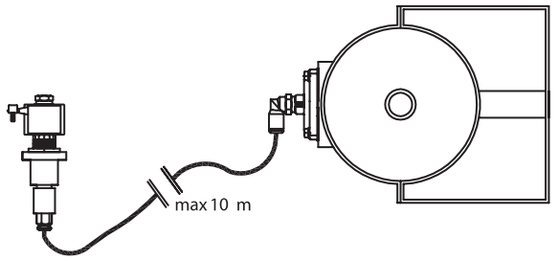

LD SERIES - REMOTE PILOT FOR DIAPHRAGM VALVES

LDC

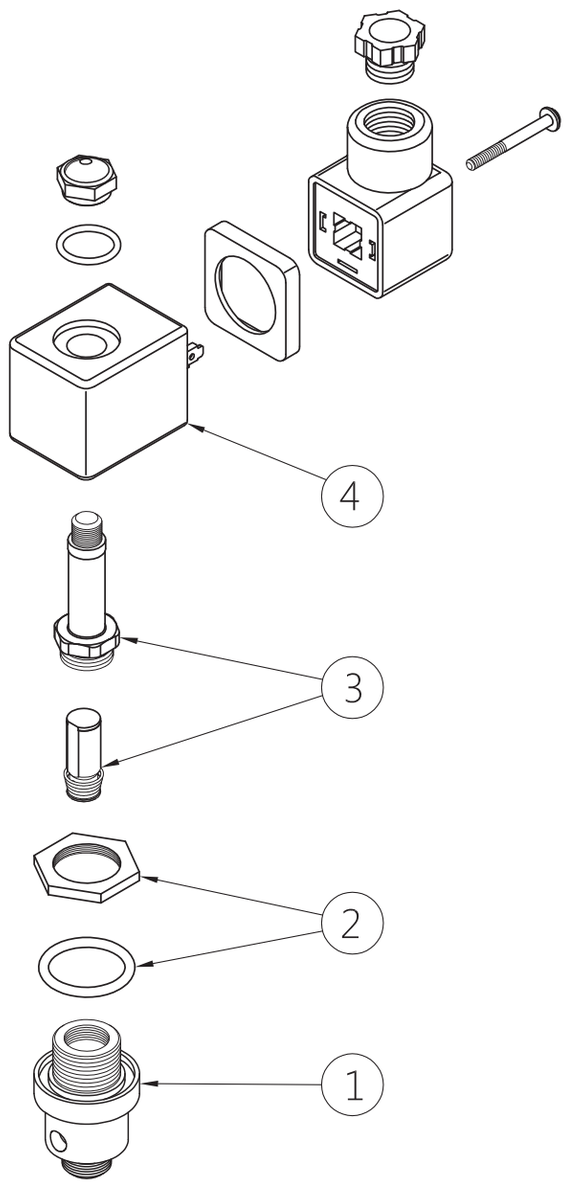

LDM

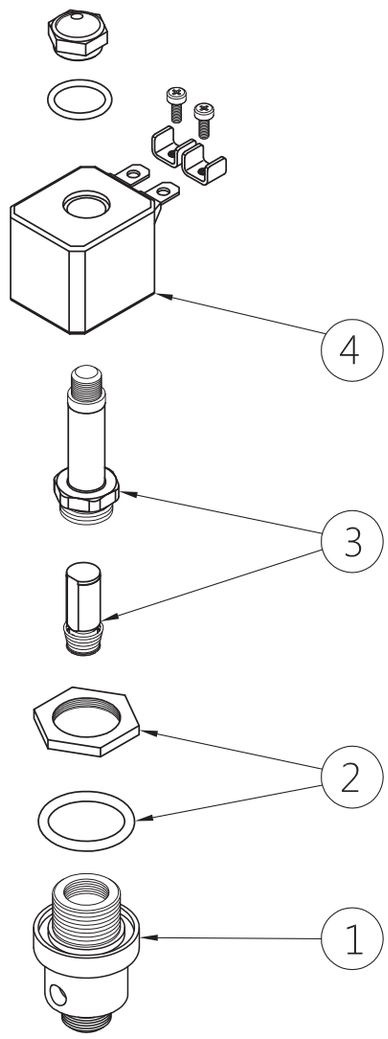

	DESCRIPTION	LDC
1	Pilot body	PCRPLD
2	Second lock nut + O-ring	3121604 + 3301224
3	Pilot unit	1331172
4	Coil + Connector	BH10.../..

	DESCRIPTION	LDM
1	Pilot body	PCRPLD
2	Second lock nut + O-ring	3121604 + 3301224
3	Pilot unit	1331172
4	Coil	BH10.../.. - A9

Cat_Turbo_2018_Valvole_EN.indd 106 16/01/19 12:14

REMOTE PILOT FOR DIAPHRAGM VALVES- ESRM SERIES

LONG-DISTANCE ACTIVATION

FEATURES	
Fluids	Non-lubricated filtered air
Operating pressure	between 0.5 and 7.5 bar
Operating temperature	-20°C; +80°C
Body	Brass
Pilot core	Stainless steel
Coil insulation	Class H
Connector	PG9 / IP 65
Standard voltage	24VDC (12W)

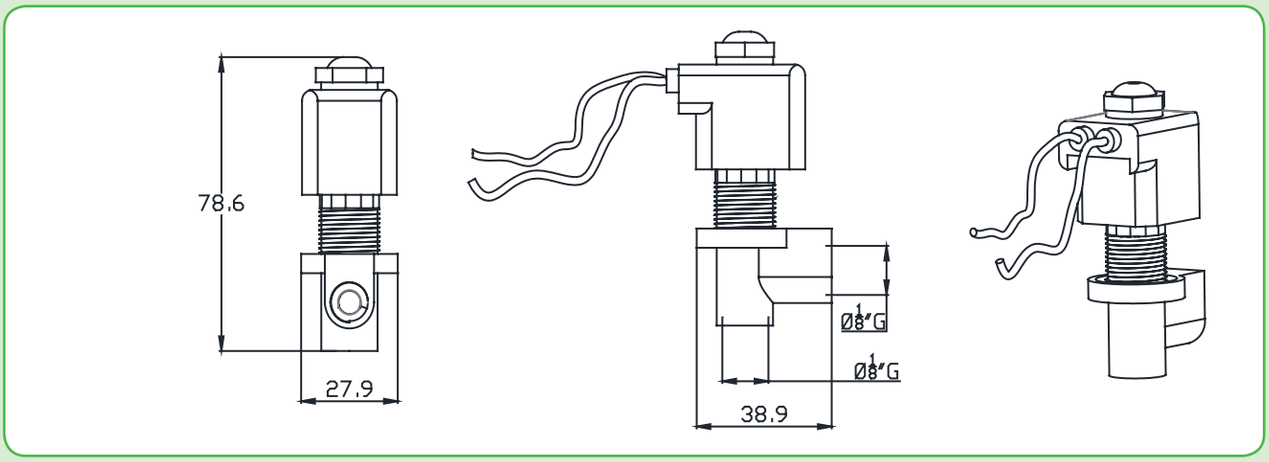

ESRM

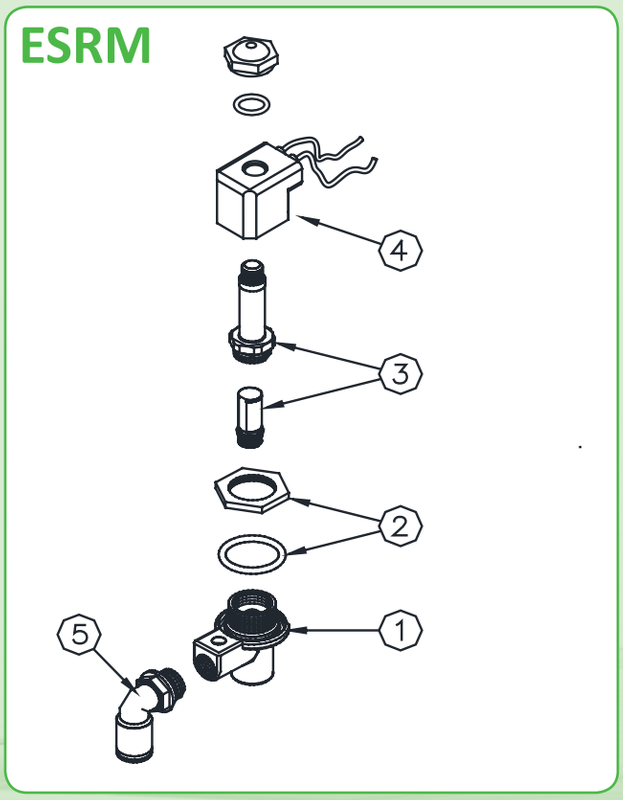

DESCRIPTION		ESRM
1	Pilot body	PCRP
2	Second lock nut + O-ring	3121604 - 3301224
3	Pilot unit	1331088
4	Coil	4121048
5	Quick connection elbow for 6x4 rislan pipe	3421002

ATEX - SOLENOID VALVES WITH ATEX CERTIFICATION

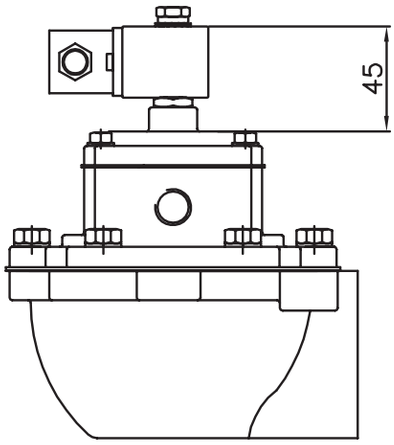

Valve configuration
ATEX II 3 GD T5
T140°C (zone 2 and 22)

With respect to the standard versions, the ATEX valves with EXII3GD marking and IP65, have coils and specific connections which make them suitable for use in zone 2-22, while maintaining practically the same overall dimensions.

Differently to the previous version, the ATEX valves with EXII2GD marking and IP65, have cols with connection cable completely integrated in the encapsulation of the same; moreover, they have a pilot group in brass, suitable for use in zone 1-21.

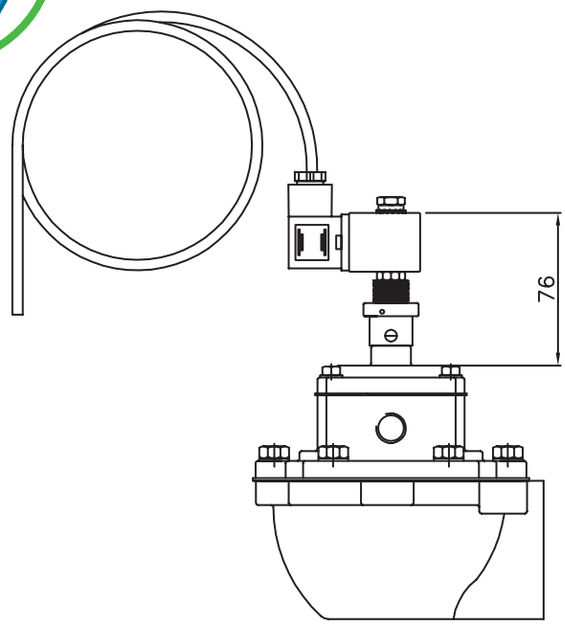

Valve configuration
ATEX II 2 GD Ex mb II T4
Ex mD 21 T135°C
Protection for construction safety
"c" EN 13463-5

Cat_Turbo_2018_Valvole_EN.indd 108 16/01/19 12:14

THE 2014/34 EU ATEX DIRECTIVE

The 2014/34/EU directive establishes the constructive and operating features (mandatory since 01/07/2003) of equipment and protective Systems intended for use in potentially explosive atmospheres. This Directive covers all explosion risks of whatever nature (electrical or not). Among its main aspects, it:

- introduces essential safety requirements (Ann. II – ESR)
- applies to equipment used in underground mines (Group I) and surface installations (Group II)
- classifies equipment into categories, according to the level of protection required
- monitors production based on corporate quality management systems

The Atex directive was the first to consider the explosion risk due to non-electrical sources, such as mechanical sparks, vibrations, surface overheating of mechanical and electrical components due to non-electrical phenomena, such as vibrations, high rotation speeds, mechanical lock, and overloads. This directive also establishes that the place of installation, deposit, and operation of the machine must be assessed carefully to be classified according to any presence and/or formation of an explosive atmosphere.
It also provides ESRs and prevention warnings as the equipment itself can be a source of explosive atmosphere (Ann. II – sect. 1.0.1).

PURPOSE OF THE DIRECTIVE - The 2014/34/EU directive was implemented by the European Union to liberalise the market of products intended to be used in potentially explosive atmospheres, whilst harmonising technical features and applicable standards. This directive aims at protecting people and property from hazards arising from the use of equipment and protection systems in a potentially explosive atmosphere.

EXPLOSIVE ATMOSPHERE - Mixture with air, under atmospheric conditions, of flammable substances in the form of gases, vapours, mists or dusts (temp. between -20°C and +40°C and pressure between 0.8 and 1.1 bar in compliance with EN60079 and EN13463-1) in which, after ignition has occurred, combustion spreads to the entire unburned mixture.

POTENTIALLY EXPLOSIVE ATMOSPHERE - An atmosphere that can become explosive due to local and operational conditions.

AREAS EXPOSED TO EXPLOSION RISKS ACCORDING TO DIRECTIVE 2014/34/EU - Hazardous areas are divided into zones according to the frequency and duration of the presence of the explosive atmosphere.

Zone 0: A place in which an explosive atmosphere consisting of a mixture with air of dangerous substances in the form of gas, vapour or mist is present continuously, or for long periods, or frequently.

Zone 1: A place in which a potentially explosive atmosphere consisting of a mixture with air of dangerous substances in the form of gas, vapour or mist is likely to occur occasionally during ordinary activities.

THE 2014/34 EU ATEX DIRECTIVE

Zone 2: A place in which an explosive atmosphere consisting of a mixture with air of dangerous substances in the form of gas, vapour or mist is not likely to occur during normal activities, but, if it does, it will persist for a short period only.

Zone 20: A place in which an explosive atmosphere in the form of a cloud of combustible dust in air is present continuously, or for long periods or frequently.

Zone 21: A place in which an explosive atmosphere in the form of a cloud of combustible dust in air is likely to occur occasionally during ordinary activities.

Zone 22: A place in which an explosive atmosphere in the form or a cloud of combustible dust in air is not likely to occur during ordinary activities, but, if it does, it will persist for a short period only.

CORRESPONDENCE BETWEEN ZONES AND CATEGORIES

GROUP I (Underground, methane and/or combustible dusts		**GROUP II** (Surface, gas/air or mixture of dust/air/vapour)					
Category M		**Category 1**		**Category 2**		**Category 3**	
1	2	G Gas Zone 0	D Dust Zone 20	G Gas Zone 1	D Dust Zone 21	G Gas Zone 2	D Dust Zone 22
Equipment ensuring a very high level of protection. Operation guaranteed in the event of possible errors	Equipment ensuring a high level of protection. Possible interruption in the presence of a potentially explosive atmosphere	For equipment ensuring a very high level of protection. In the event that potentially explosive atmospheres occur for long periods or frequently.		For equipment ensuring a high level of protection. In the event that potentially explosive atmospheres occur occasionally.		For equipment ensuring a normal level of protection. In the event that potentially explosive atmospheres occur only rarely and for a short period.	

In an industrial setting (e.g. ATEX product in Group II), users are responsible for carrying out a risk assessment and dividing the workplace into zones according to the potential presence of gas, vapour, and combustible dust (in clouds or layers) in the event of activities that may lead to explosion risks.
Directive 2014/34/EU is implemented in Italy by Legislative Decree 81/2008 Title XI.
The manufacturer provides all the details concerning the Groups and categories the products fall into, so that users can decide in which Zone the ATEX product can be used safely, although it will not be possible to foresee where and how they will actually operate.

Cat_Turbo_2018_Valvole_EN.indd 110 16/01/19 12:14

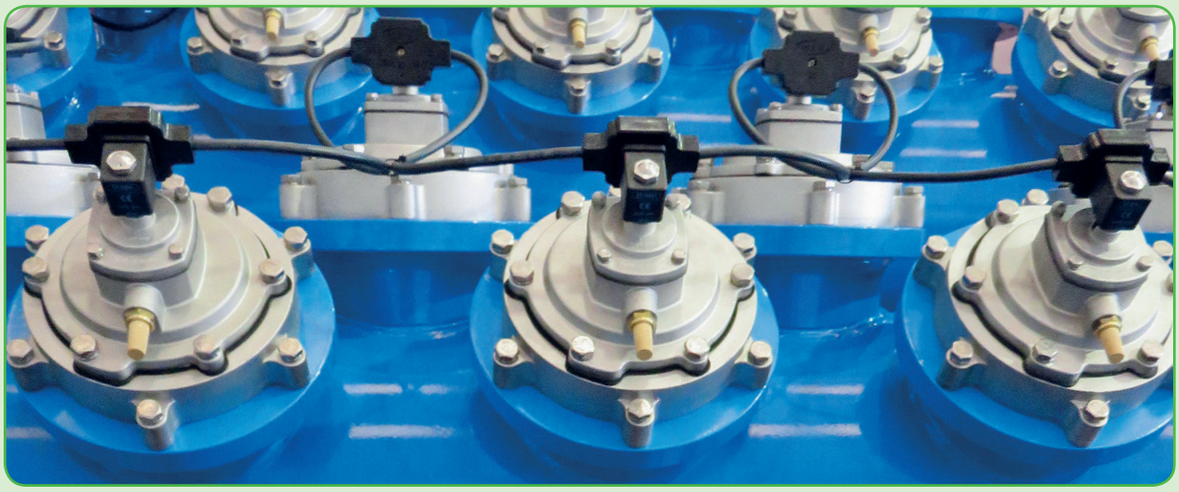

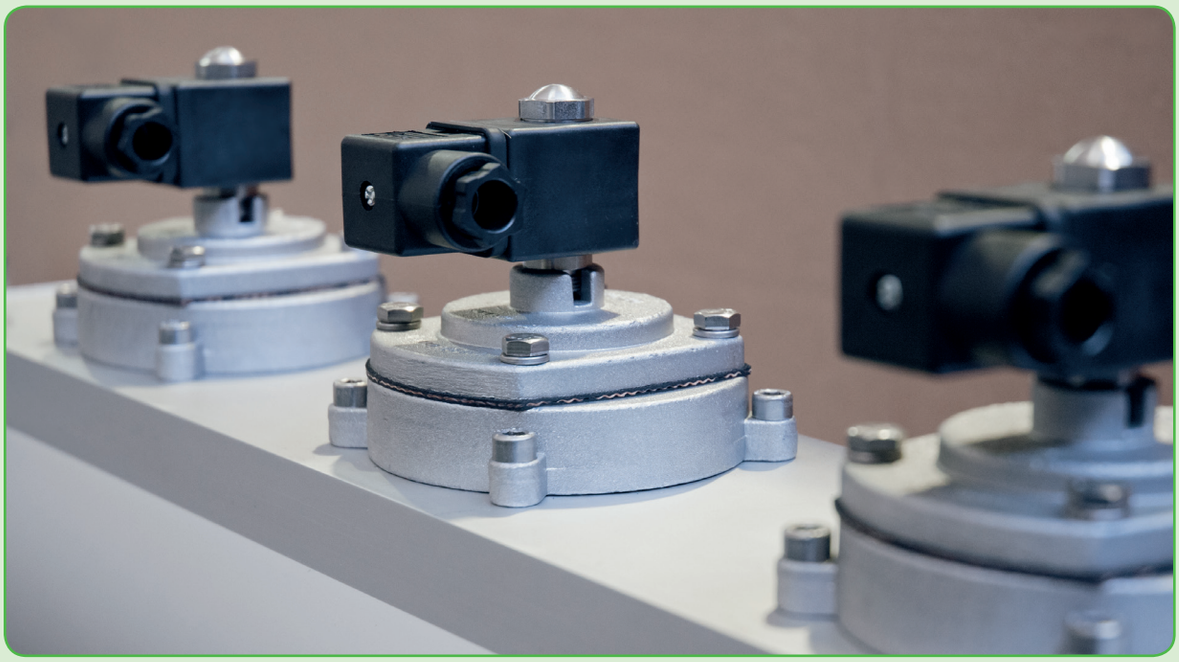

ELECTRONIC SYSTEMS

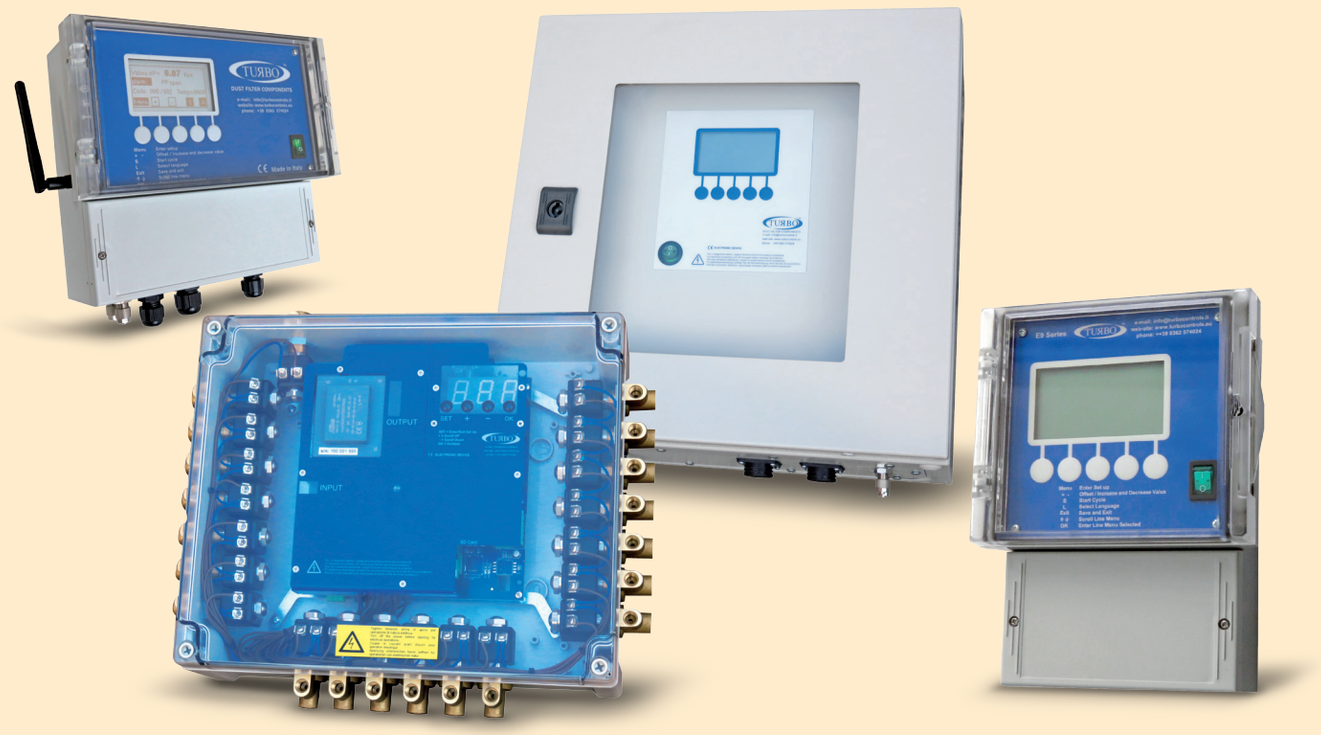

Turbo provides a wide range of electronic devices to control high-tech dust collector systems.

This range of products can handle any type of system, from the smallest to the largest.

Sequencers / Economisers serve as digital programmers, either providing for the sequential activation of the solenoid valves or through a sensor for automatically measuring the pressure difference only when the filter requires so. This allows for considerable energy savings and extends the durability of the filtering elements.

Various configurations of control units with MODBUS RTU Master + Slave serial system (pneumatic or electrical) allow you to manage the dust collector system avoiding the cost for traditional solenoid valve wiring.

Cat_Turbo_2018_Sistemi_EN.indd 112 16/01/19 12:23

These systems have the following features:

- Interface with PC/PLC/SUPERVISOR through RS485
- Control of parameters, such as differential pressure, temperature, humidity, and header tank pressure.
- Continuous dust emission control and recording.
- Complete management of compartment filters (cells) for ONLINE and OFFLINE operation.

All control devices are equipped with a quick and user-friendly menu and large displays that indicate the pressure difference in the filter. Data can be set easily using the keyboard or remotely using Turbo applications.
Turbo electronic control units cover the most common requirements when it comes to dust collector systems; however, our technical personnel can provide custom solutions ensuring flexibility and professionalism.

HOW TO ORDER

ECONOMISERS AND SEQUENCERS

1 2 3 4 5 6 7 8 9 10 11 12 13 14 15 16 17 18 19 20

E = electronics

TYPE OF SEQUENCER

1 T = sequencer with numerical display
2 T = economiser with numerical display
A T = economiser with numerical display
3 T = differential pressure switch with numerical display
4 T = sequencer in enclosure
5 T = sequencer with multi-language graphical display
6 T = economiser with multi-language graphical display
7 T = sequencer with multi-language graphical display
8 T = economiser with multi-language graphical display

NO. OF OUTPUTS

01÷184 = No. of outputs

INPUT VOLTAGE

D = 12V DC
U = 024V DC
B = 024V 50-60 Hz
L = 110V 50-60 Hz
M = 220V 50-60 Hz

OUTPUT VOLTAGE

D = 12V DC
U = 024V DC
B = 024V 50-60 Hz
L = 110V 50-60 Hz
M = 220V 50-60 Hz

CONTAINER

12,13 .... =
50,51 .... =
type of container

CERTIFICATION

00 = standard sequencer/economiser
22 = ATEX sequencer/economiser for zone 22
21 = ATEX sequencer/economiser for zone 21

OPTIONS

CABLE GLANDS

TYPE

G = PG9 cable gland
H = PG11 cable gland
D = M20 cable gland
F = M16 cable gland

QUANTITY

01 = n° 1 cable gland installed
02 = n° 2 cable glands installed
... = No. of cable glands installed

MATRIX WIRING

M = designed for Matrix system

QUANTITY

01 = n° 1 connector to Matrix panel
02 = n° 2 connectors to Matrix panel
... = No. of connectors to Matrix panel

REMOTE PILOTS

P = SRM remote pilot
L = LDM remote pilot

QUANTITY

01 = n°1 remote pilot installed
02 = n° 2 remote pilots installed
... = No. of remote pilots installed

Cat_Turbo_2018_Sistemi_EN.indd 114 16/01/19 12:23

ECONOMISERS AND SEQUENCERS

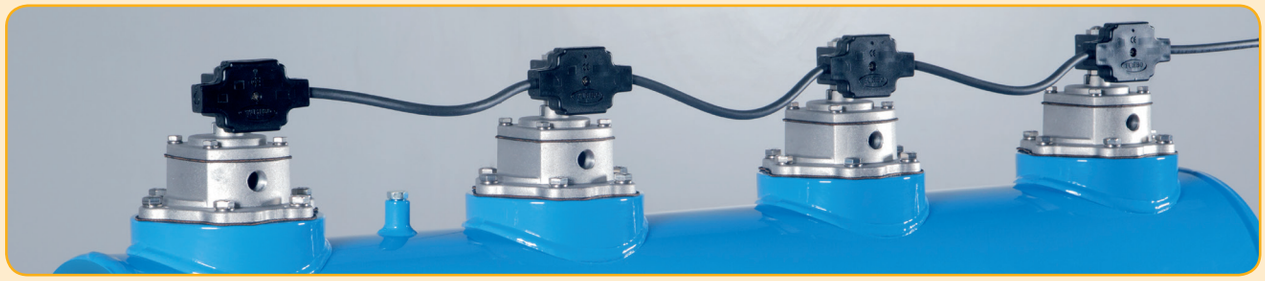

CYCLICAL SEQUENCER WITH NUMERICAL DISPLAY	E1T
ECONOMISER WITH DIFFERENTIAL PRESSURE SWITCH WITH NUMERICAL DISPLAY	E2T
ECONOMISER WITH DIFFERENTIAL PRESSURE SWITCH WITH NUMERICAL DISPLAY	EAT
DIGITAL PRESSURE SWITCH WITH NUMERICAL DISPLAY	E3T
CYCLICAL SEQUENCER WITH MULTI-LANGUAGE GRAPHICAL DISPLAY	E5T
ECONOMISER WITH DIFFERENTIAL PRESSURE SWITCH WITH MULTI-LANGUAGE GRAPHICAL DISPLAY	E6T
CYCLICAL SEQUENCER WITH MULTI-LANGUAGE GRAPHICAL DISPLAY	E7T
ECONOMISER WITH DIFFERENTIAL PRESSURE SWITCH WITH MULTI-LANGUAGE GRAPHICAL DISPLAY	E8T
ECONOMISER ECONET MODBUS RS485 - TCP/IP WITH MULTI-LANGUAGE GRAPHICAL DISPLAY	ECONET
ECONET REMOTE DISPLAY DEVICE	BEGA
PC PANEL FOR REMOTE MANAGEMENT OF THE ECONET PLUS AND TRIBO UNITS	ECONET
ECONET CONNECTOR WITH BUILT-IN ACTIVATION BOARD	ECONET
RS458 MODBUS ERCP PILOT ENCLOSURE	ERCP
BUILT-IN E4T SEQUENCER IN RCP ENCLOSURE	E4T
TRIBOELECTRIC SENSOR	E9TRB
CONTROL UNIT FOR TRIBOELECTRIC SENSOR	E9T
TIMED CONNECTOR	4401002 - 4401004
MATRIX ELECTRICAL SYSTEM	MATRIX

E1T CONTROL UNIT SEQUENCER 4÷16 OUTPUT CHANNELS

DESCRIPTION

Sequencer for controlling the pneumatic cleaning of industrial dust collector systems. It has 2 output relay contacts and 2 digital input contacts. 3-digit luminous LED display, which allows to read the unit operating status, the active solenoid valves and any alarms, at all times.

OPTIONS UPON REQUEST

- Activation of 2 solenoid valves for every output channel.
- Cable glands for power supply input and output of solenoid valves drive cables.
- Connector from wired panel for connection to Matrix cabling.
- Built-in pilots for remote control of the pneumatic valves.
- Casing container with different format.
- Zone 22 ATEX Certification.

REFERENCE STANDARDS

- Directive 2014/30/EC Electromagnetic Compatibility meeting European harmonised standards EN61000-6-2:2005 class B in standard EN61000-6-4:2001
- Directive 2014/35/EU Low Voltage meeting European harmonised standards EN 60947-1:2004

TECHNICAL SPECIFICATIONS	
Power supply voltage	115 Vac 50-60 Hz ± 10 % 230 Vac 50-60 Hz ± 10 %
Power supply voltage upon request	24 Vac ± 10 % 24 Vdc ± 10 %
Output voltage for solenoid valves	115 Vac 50-60 Hz 230 Vac 50-60 Hz 24 Vac 24 Vdc
Inputs	Remote enabling consent switch. Post-cleaning cycles fan switch.
Solenoid valves output channels	4 ÷ 16
Electric consumption	28 Watts at maximum load
Alarm Relays	2 normally closed Maximum load: 3A @ 250Vac, 2A @ 24Vdc, 24 Vac.
Screen	3 x 0.8 inch digit 7-segment LED display
5 x 20 mm glass fuse	115 or 230 Vac 1 x 1 A 24 Vac or 24 Vdc 1 x 3 A
Operating temperature	-10 °C - 55 °C
Storage temperature	-20 °C - 60 °C
Environmental humidity	0 ÷ 95% Relative non condensing
Valves opening impulse time	50 m.sec. ÷ 5 sec.
Interval pause time between valves opening	1 sec. ÷ 999 sec.
Casing	Base in ABS Lid in Polycarbonate
Protection rating from water and dust	IP65 DIN EN 60529
Shock resistance	IK07 2 Joule (EN62262)

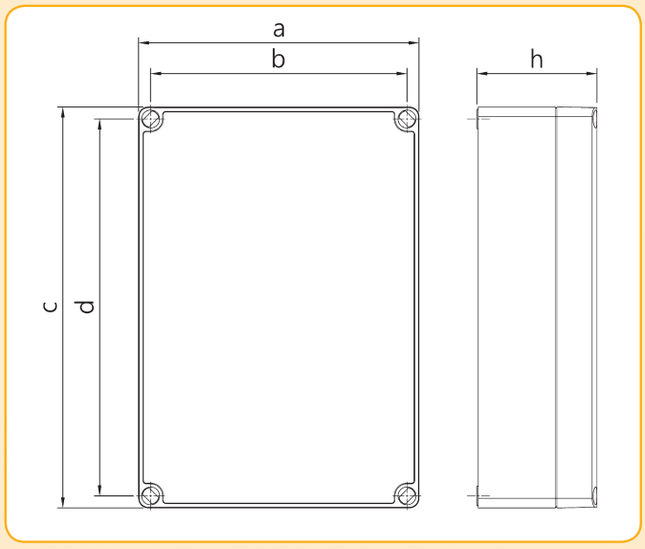

Number of output channels	Dimension of the Structure				
	a	b	c	d	h
4 ÷ 8	175	160	175	160	75
12 ÷ 16	175	160	250	235	75

Phone: 01256 477466
Email: Sales@turbocontrols.co.uk
www.turbocontrols.co.uk

Cat_Turbo_2018_Sistemi_EN.indd 116 16/01/19 12:23

E1T CONTROL UNIT SEQUENCER 20÷99 OUTPUT CHANNELS

DESCRIPTION

Sequencer for controlling the pneumatic cleaning of industrial dust collector systems. It has 3 output relay contacts and 2 digital input contacts. 3-digit luminous LED display, which allows to read the unit operating status, the active solenoid valves and any alarms, at all times. Data storage Micro SD memory board.

OPTIONS UPON REQUEST

- Activation of 2 solenoid valves for every output channel.
- Cable glands for power supply input and output of solenoid valves drive cables.
- Connector from wired panel for connection to Matrix cabling.
- Built-in pilots for remote control of the pneumatic valves.
- Casing container with different format.
- Zone 22 ATEX Certification.

REFERENCE STANDARDS

- Directive 2014/30/EC Electromagnetic Compatibility meeting European harmonised standards EN61000-6-2:2005 class B in standard EN61000-6-4:2001
- Directive 2014/35/EU Low Voltage meeting European harmonised standards EN 60947-1:2004

TECHNICAL SPECIFICATIONS	
Power supply voltage	115 Vac 50-60 Hz ± 10 % 230 Vac 50-60 Hz ± 10 %
Power supply voltage upon request	24 Vac ± 10 % 24 Vdc ± 10 %
Output voltage for solenoid valves	115 Vac 50-60 Hz 230 Vac 50-60 Hz 24 Vac 24 Vdc
Inputs	Remote enabling consent switch. Post-cleaning cycles fan switch.
Solenoid valves output channels	20 ÷ 99 with expansions
Electric consumption	28 Watts at maximum load
Alarm Relays	3 normally closed Maximum load: 3A @ 250Vac, 2A @ 24Vdc, 24 Vac.
Screen	3 x 0.8 inch digit 7-segment LED display
5 x 20 mm glass fuse	115 or 230 Vac 1 x 1 A 24 Vac or 24 Vdc 1 x 3 A
Operating temperature	-10 °C - 55 °C
Storage temperature	-20 °C - 60 °C
Environmental humidity	0 ÷ 95% Relative non condensing
Valves opening impulse time	50 m.sec. ÷ 5 sec.
Interval pause time between valves opening	1 sec. ÷ 999 sec.
Casing	Base in ABS Lid in Polycarbonate
Protection rating from water and dust	IP65 DIN EN 60529
Shock resistance	IK07 2 Joule (EN62262)

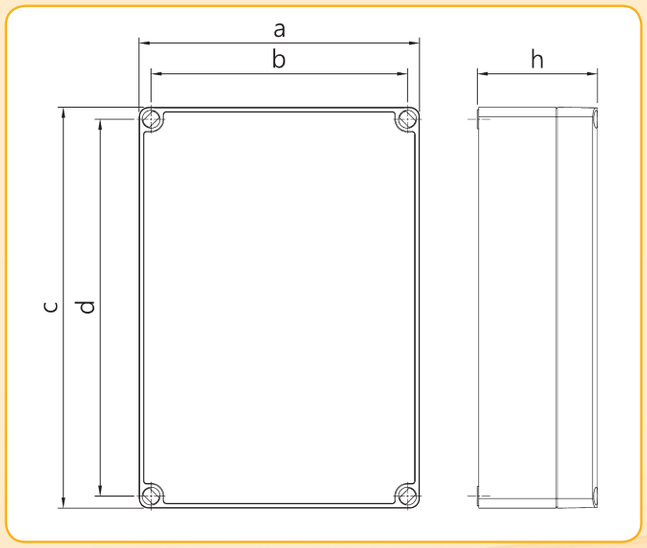

Number of output channels	Dimension of the Structure				
	a	b	c	d	h
20 ÷ 24	200	180	300	280	130
28 ÷ 56	200	180	400	380	130
60 ÷ 99	300	280	600	580	130

Phone: 01256 477466
Email: Sales@turbocontrols.co.uk
www.turbocontrols.co.uk

Cat_Turbo_2018_Sistemi_EN.indd 117 16/01/19 12:23

E2T CONTROL UNIT ECONOMISER 4÷16 OUTPUT CHANNELS

DESCRIPTION

Economiser for controlling the pneumatic cleaning of industrial dust collector systems. It has 2 output relay contacts and 2 digital input contacts. Differential pressure digital control through internal transducer, which allows the accurate analysis of the filter clogging status. 3-digit luminous LED display, which allows to read the filter clogging status, the active solenoid valves and any alarms, at all times.

OPTIONS UPON REQUEST

- Activation of 2 solenoid valves for every output channel.
- Cable glands for power supply input and output of solenoid valves drive cables.
- Connector from wired panel for connection to Matrix cabling.
- Built-in pilots for remote control of the pneumatic valves.
- Casing container with different format.
- Zone 22 ATEX Certification.

REFERENCE STANDARDS

- Directive 2014/30/EC Electromagnetic Compatibility meeting European harmonised standards EN61000-6-2:2005 class B in standard EN61000-6-4:2001
- Directive 2014/35/EU Low Voltage meeting European harmonised standards EN 60947-1:2004

Phone: 01256 477466
Email: Sales@turbocontrols.co.uk
www.turbocontrols.co.uk

TECHNICAL SPECIFICATIONS	
Power supply voltage	115 Vac 50-60 Hz ± 10 % 230 Vac 50-60 Hz ± 10 %
Power supply voltage upon request	24 Vac ± 10 % 24 Vdc ± 10 %
Output voltage for solenoid valves	115 Vac 50-60 Hz 230 Vac 50-60 Hz 24 Vac 24 Vdc
Inputs	Remote enabling consent switch. Post-cleaning cycles fan switch.
Solenoid valves output channels	4 ÷ 16
Active output 4-20ma	Proportional to the dP reading for remote consultation of the pressure.
Electric consumption	28 Watts at maximum load
Alarm Relays	2 normally closed Maximum load: 3A @ 250Vac, 2A @ 24Vdc, 24 Vac.
Differential pressure switch	0 - 4 kPa
Screen	3 x 0.8 inch digit 7-segment LED display
5 x 20 mm glass fuse	115 or 230 Vac 1 x 1 A 24 Vac or 24 Vdc 1 x 3 A
Operating temperature	-10 °C - 55 °C
Storage temperature	-20 °C - 60 °C
Environmental humidity	0 ÷ 95% Relative non condensing
Valves opening impulse time	50 m.sec. ÷ 5 sec.
Interval pause time between valves opening	1 sec. ÷ 999 sec.
Casing	Base in ABS Lid in Polycarbonate
Protection rating from water and dust	IP65 DIN EN 60529
Shock resistance	IK07 2 Joule (EN62262)

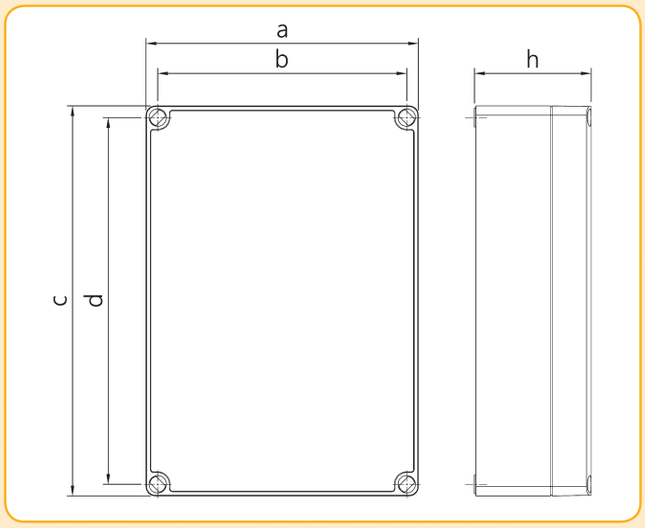

Number of output channels	Dimension of the Structure				
	a	b	c	d	h
4 ÷ 8	175	160	175	160	75
12 ÷ 16	175	160	250	235	75

Cat_Turbo_2018_Sistemi_EN.indd 118 16/01/19 12:23

E2T CONTROL UNIT ECONOMISER 20÷99 OUTPUT CHANNELS

DESCRIPTION

Economiser for controlling the pneumatic cleaning of industrial dust collector systems. It has 3 output relay contacts and 2 digital input contacts. Differential pressure digital control through internal transducer, which allows the accurate analysis of the filter clogging status. 3-digit luminous LED display, which allows to read the filter clogging status, the active solenoid valves and any alarms, at all times. Data storage Micro SD memory board.

OPTIONS UPON REQUEST

- Activation of 2 solenoid valves for every output channel.
- Cable glands for power supply input and output of solenoid valves drive cables.
- Connector from wired panel for connection to Matrix cabling.
- Built-in pilots for remote control of the pneumatic valves.
- Casing container with different format.
- Zone 22 ATEX Certification.

REFERENCE STANDARDS

- Directive 2014/30/EC Electromagnetic Compatibility meeting European harmonised standards EN61000-6-2:2005 class B in standard EN61000-6-4:2001
- Directive 2014/35/EU Low Voltage meeting European harmonised standards EN 60947-1:2004

Phone: 01256 477466
Email: Sales@turbocontrols.co.uk
www.turbocontrols.co.uk

TECHNICAL SPECIFICATIONS	
Power supply voltage	115 Vac 50-60 Hz ± 10 % 230 Vac 50-60 Hz ± 10 %
Power supply voltage upon request	24 Vac ± 10 % 24 Vdc ± 10 %
Output voltage for solenoid valves	115 Vac 50-60 Hz 230 Vac 50-60 Hz 24 Vac 24 Vdc
Inputs	Remote enabling consent switch. Post-cleaning cycles fan switch.
Solenoid valves output channels	20 ÷ 99 with expansions
Active output 4-20ma	Proportional to the dP reading for remote consultation of the pressure.
Electric consumption	28 Watts at maximum load
Alarm Relays	3 normally closed Maximum load: 3A @ 250Vac, 2A @ 24Vdc, 24 Vac.
Differential pressure switch	0 - 4 kPa
Screen	3 x 0.8 inch digit 7-segment LED display
5 x 20 mm glass fuse	115 or 230 Vac 1 x 1 A 24 Vac or 24 Vdc 1 x 3 A
Operating temperature	-10 °C - 55 °C
Storage temperature	-20 °C - 60 °C
Environmental humidity	0 ÷ 95% Relative non condensing
Valves opening impulse time	50 m.sec. ÷ 5 sec.
Interval pause time between valves opening	1 sec. ÷ 999 sec.
Casing	Base in ABS Lid in Polycarbonate
Protection rating from water and dust	IP65 DIN EN 60529
Shock resistance	IK07 2 Joule (EN62262)

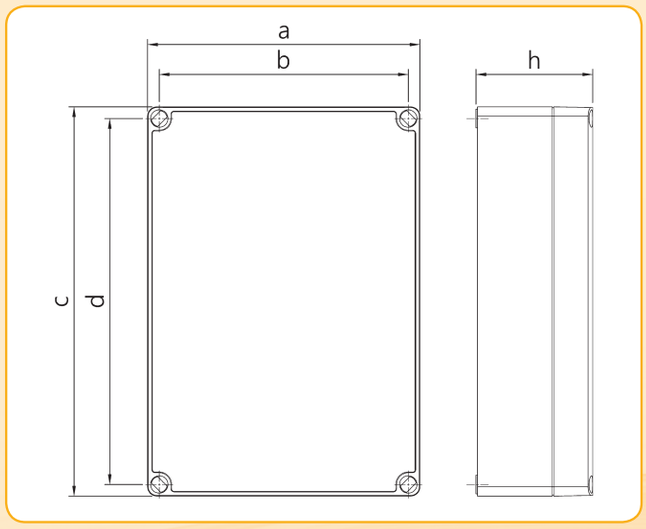

Number of output channels	Dimension of the Structure				
	a	b	c	d	h
20 ÷ 24	200	180	300	280	130
28 ÷ 56	200	180	400	380	130
60 ÷ 99	300	280	600	580	130

Cat_Turbo_2018_Sistemi_EN.indd 119 16/01/19 12:23

EAT CONTROL UNIT ECONOMISER 4÷16 OUTPUT CHANNELS

DESCRIPTION

Economiser for controlling the pneumatic cleaning of industrial dust collector systems. It has 3 output relay contacts and 2 digital input contacts. Differential pressure digital control through internal transducer, which allows the accurate analysis of the filter clogging status. 3-digit luminous LED display, which allows to read the filter clogging status, the active solenoid valves and any alarms, at all times. Data storage Micro SD memory board.

OPTIONS UPON REQUEST

- Activation of 2 solenoid valves for every output channel.
- Cable glands for power supply input and output of solenoid valves drive cables.
- Connector from wired panel for connection to Matrix cabling.
- Built-in pilots for remote control of the pneumatic valves.
- Casing container with different format.
- Zone 22 ATEX Certification.

REFERENCE STANDARDS

- Directive 2014/30/EC Electromagnetic Compatibility meeting European harmonised standards EN61000-6-2:2005 class B in standard EN61000-6-4:2001
- Directive 2014/35/EU Low Voltage meeting European harmonised standards EN 60947-1:2004

Phone: 01256 477466
Email: Sales@turbocontrols.co.uk
www.turbocontrols.co.uk

TECHNICAL SPECIFICATIONS	
Power supply voltage	115 Vac 50-60 Hz ± 10 % 230 Vac 50-60 Hz ± 10 %
Power supply voltage upon request	24 Vac ± 10 % 24 Vdc ± 10 %
Output voltage for solenoid valves	115 Vac 50-60 Hz 230 Vac 50-60 Hz 24 Vac 24 Vdc
Inputs	Remote enabling consent switch. Post-cleaning cycles fan switch.
Solenoid valves output channels	4 ÷ 16
Electric consumption	28 Watts at maximum load
Alarm Relays	3 normally closed Maximum load: 3A @ 250Vac, 2A @ 24Vdc, 24 Vac.
Differential pressure switch	0 - 4 kPa
Screen	3 x 0.8 inch digit 7-segment LED display
5 x 20 mm glass fuse	115 or 230 Vac 1 x 1 A 24 Vac or 24 Vdc 1 x 3 A
Operating temperature	-10 °C - 55 °C
Storage temperature	-20 °C - 60 °C
Environmental humidity	0 ÷ 95% Relative non condensing
Valves opening impulse time	50 m.sec. ÷ 5 sec.
Interval pause time between valves opening	1 sec. ÷ 999 sec.
Casing	Base in ABS Lid in Polycarbonate
Protection rating from water and dust	IP65 DIN EN 60529
Shock resistance	IK07 2 Joule (EN62262)

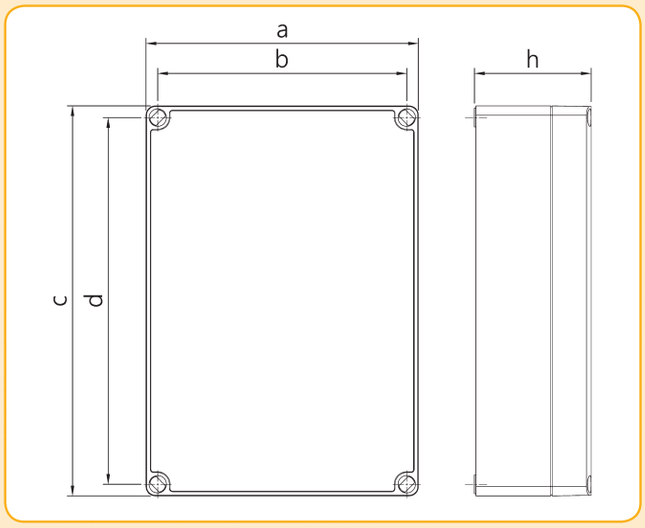

Number of output channels	Dimension of the Structure				
	a	b	c	d	h
04 ÷ 16	175	160	250	235	75

Cat_Turbo_2018_Sistemi_EN.indd 120 16/01/19 12:24

Digital differential pressure switch - e3T

DESCRIPTION

Differential pressure reading and communication of the minimum and maximum dP through 2 separate relays. Possibility of saving the data and alarms on SD board.
Differential pressure digital control through internal transducer, which allows the accurate analysis of the filter clogging status.
3-digit luminous LED display, which allows to read the filter clogging status, the active solenoid valves and any alarms, at all times.
Data storage SD memory board.

OPTIONS UPON REQUEST

- Cable glands for power supply input.
- Zone 22 ATEX Certification.

REFERENCE STANDARDS

- Directive 2014/30/EC Electromagnetic Compatibility meeting European harmonised standards EN61000-6-2:2005 class B in standard EN61000-6-4:2001
- Directive 2014/35/EU Low Voltage meeting European harmonised standards EN 60947-1:2004

TECHNICAL SPECIFICATIONS	
Power supply voltage	115 Vac 50-60 Hz ± 10 % 230 Vac 50-60 Hz ± 10 %
Power supply voltage upon request	24 Vac ± 10 % 24 Vdc ± 10 %
Active output 4-20mA	Proportional to the dP reading for remote consultation of the pressure.
Electric consumption	6 Watts at maximum load
Alarm Relays	2 normally closed Maximum load: 3A @ 250Vac, 2A @ 24Vdc, 24 Vac.
Differential pressure switch	0 - 10 kPa
Screen	3 x 0.8 inch digit 7-segment LED display
5 x 20 mm glass fuse	315 mA
Operating temperature	-10 °C - 55 °C
Storage temperature	-20 °C - 60 °C
Environmental humidity	0 ÷ 95% Relative non condensing
Casing	Base in ABS Lid in Polycarbonate
Protection rating from water and dust	IP65 DIN EN 60529
Shock resistance	IK07 2 Joule (EN62262)

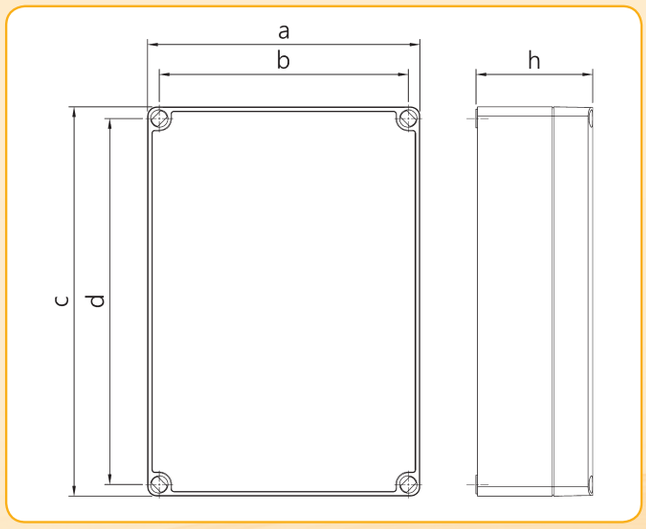

Dimension of the Structure

a	b	c	d	h
175	160	175	160	75

Phone: 01256 477466
Email: Sales@turbocontrols.co.uk
www.turbocontrols.co.uk

Cat_Turbo_2018_Sistemi_EN.indd 121 16/01/19 12:24

E5T CONTROL UNIT SEQUENCER 20÷184 OUTPUT CHANNELS

DESCRIPTION

Sequencer for controlling the pneumatic cleaning of industrial dust collector systems. It has 3 output relay contacts and 2 digital input contacts. Luminous LCD display, which allows to read the unit operating status, the active solenoid valves and any alarms, at all times. Data storage Micro SD memory board.

OPTIONS UPON REQUEST

- Activation of 2 solenoid valves or 4 solenoid valves for every output channel.
- Cable glands for power supply input and output of solenoid valves drive cables.
- Connector from wired panel for connection to Matrix cabling.
- Casing container with different format.
- Zone 22 ATEX Certification.

REFERENCE STANDARDS

- Directive 2014/30/EC Electromagnetic Compatibility meeting European harmonised standards EN61000-6-2:2005 class B in standard EN61000-6-4:2001
- Directive 2014/35/EU Low Voltage meeting European harmonised standards EN 60947-1:2004

TECHNICAL SPECIFICATIONS	
Power supply voltage	115 Vac 50-60 Hz ± 10 % 230 Vac 50-60 Hz ± 10 %
Power supply voltage upon request	24 Vac ± 10 % 24 Vdc ± 10 %
Output voltage for solenoid valves	115 Vac 50-60 Hz 230 Vac 50-60 Hz 24 Vac 24 Vdc
Inputs	Remote enabling consent switch. Post-cleaning cycles fan switch.
Solenoid valves output channels	20 ÷ 184
Electric consumption	30 Watts at maximum load
Alarm Relays	3 normally closed Maximum load: 3A @ 250Vac, 2A @ 24Vdc, 24 Vac.
Screen	Backlit monochromatic graphic LCD B/N 128 x 64 pixel
5 x 20 mm glass fuse	115 or 230 Vac 1 x 1 A 24 Vac or 24 Vdc 1 x 3 A
Operating temperature	-10 °C - 55 °C
Storage temperature	-20 °C - 60 °C
Environmental humidity	0 ÷ 95% Relative non condensing
Valves opening impulse time	50 m.sec. ÷ 5 sec.
Interval pause time between valves opening	1 sec. ÷ 999 sec.
Casing	Thick steel sheet 15/10, painted RAL7035. Door with glass and locking element.
Protection rating from water and dust	IP65 DIN EN 60529
Shock resistance	IK09 10 Joule (EN62208)

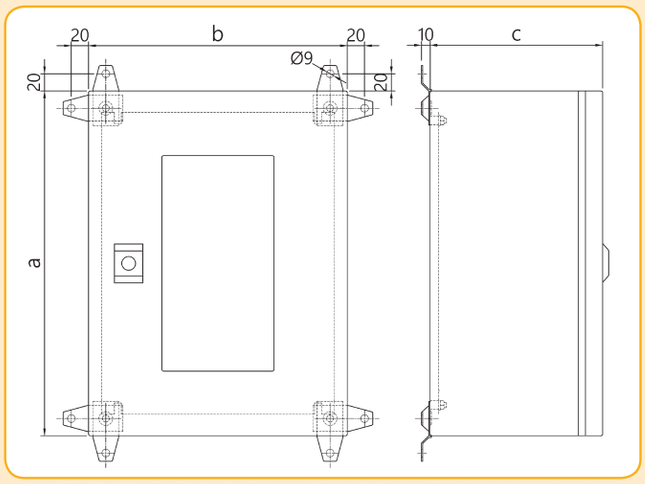

Number of output channels	Dimension of the Structure		
	A	B	C
24 ÷ 56	400 mm	400 mm	200 mm
64 ÷ 120	600 mm	400 mm	200 mm
124 ÷ 184	800 mm	600 mm	250 mm
> 185	Dimension on request		

Phone: 01256 477466
Email: Sales@turbocontrols.co.uk
www.turbocontrols.co.uk

Cat_Turbo_2018_Sistemi_EN.indd 122 16/01/19 12:24

E6T CONTROL UNIT ECONOMISER 20÷184 OUTPUT CHANNELS

DESCRIPTION

Economiser for controlling the pneumatic cleaning of industrial dust collector systems. It has 3 output relay contacts and 2 digital input contacts. Differential pressure digital control through internal transducer, which allows the accurate analysis of the filter clogging status. Luminous LCD display, which allows to read the filter clogging status, the active solenoid valves and any alarms, at all times. Data storage Micro SD memory board.

OPTIONS UPON REQUEST

- Activation of 2 solenoid valves or 4 solenoid valves for every output channel.
- Cable glands for power supply input and output of solenoid valves drive cables.
- Connector from wired panel for connection to Matrix cabling.
- Casing container with different format.
- Zone 22 ATEX Certification.

REFERENCE STANDARDS

- Directive 2014/30/EC Electromagnetic Compatibility meeting European harmonised standards EN61000-6-2:2005 class B in standard EN61000-6-4:2001
- Directive 2014/35/EU Low Voltage meeting European harmonised standards EN 60947-1:2004

TECHNICAL SPECIFICATIONS	
Power supply voltage	115 Vac 50-60 Hz ± 10 % 230 Vac 50-60 Hz ± 10 %
Power supply voltage upon request	24 Vac ± 10 % 24 Vdc ± 10 %
Output voltage for solenoid valves	115 Vac 50-60 Hz 230 Vac 50-60 Hz 24 Vac 24 Vdc
Inputs	Remote enabling consent switch. Post-cleaning cycles fan switch.
Solenoid valves output channels	20 ÷ 184
Electric consumption	30 Watts at maximum load
Alarm Relays	3 normally closed Maximum load: 3A @ 250Vac, 2A @ 24Vdc, 24 Vac.
differential pressure switch	0 - 4 kPa
Screen	Backlit monochromatic graphic LCD B/N 128 x 64 pixel
5 x 20 mm glass fuse	115 or 230 Vac 1 x 1 A 24 Vac or 24 Vdc 1 x 3 A
Operating temperature	-10 °C - 55 °C
Storage temperature	-20 °C - 60 °C
Environmental humidity	0 ÷ 95% Relative non condensing
Valves opening impulse time	50 m.sec. ÷ 5 sec.
Interval pause time between valves opening	1 sec. ÷ 999 sec.
Casing	Thick steel sheet 15/10, painted RAL7035. Door with glass and locking element.
Protection rating from water and dust	IP65 DIN EN 60529
Shock resistance	IK09 10 Joule (EN62208)

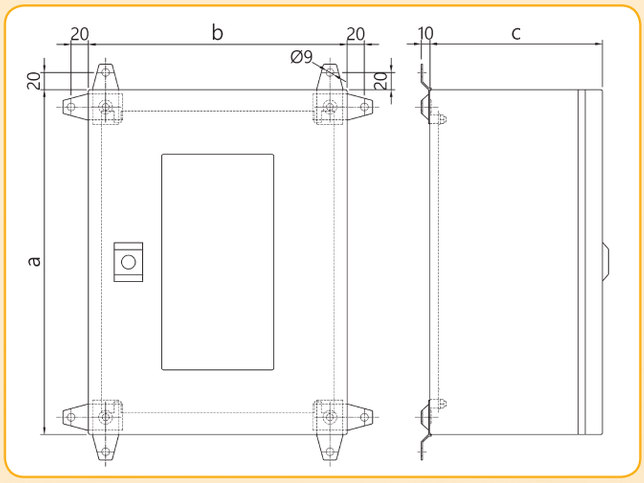

Number of output channels	Dimension of the Structure		
	A	B	C
24 ÷ 56	400 mm	400 mm	200 mm
64 ÷ 120	600 mm	400 mm	200 mm
124 ÷ 184	800 mm	600 mm	250 mm
> 185	Dimension on request		

Phone: 01256 477466
Email: Sales@turbocontrols.co.uk
www.turbocontrols.co.uk

E7T CONTROL UNIT SEQUENCER 4÷16 OUTPUT CHANNELS

DESCRIPTION

Sequencer for controlling the pneumatic cleaning of industrial dust collector systems. It has 3 output relay contacts and 2 digital input contacts. Luminous LCD display, which allows to read the unit operating status, the active solenoid valves and any alarms, at all times.

OPTIONS UPON REQUEST

- Activation of 2 solenoid valves for every output channel.
- Cable glands for power supply input and output of solenoid valves drive cables.
- Connector from wired panel for connection to Matrix cabling.
- Zone 22 ATEX Certification.

REFERENCE STANDARDS

- Directive 2014/30/EC Electromagnetic Compatibility meeting European harmonised standards EN61000-6-2:2005 class B in standard EN61000-6-4:2001
- Directive 2014/35/EU Low Voltage meeting European harmonised standards EN 60947-1:2004

TECHNICAL SPECIFICATIONS	
Power supply voltage	115 Vac 50-60 Hz ± 10 % 230 Vac 50-60 Hz ± 10 %
Power supply voltage upon request	24 Vac ± 10 % 24 Vdc ± 10 %
Output voltage for solenoid valves for solenoid valves	115 Vac 50-60 Hz 230 Vac 50-60 Hz 24 Vac 24 Vdc
Inputs	Remote enabling consent switch. Post-cleaning cycles fan switch.
Solenoid valves output channels	01 ÷ 16
Electric consumption	28 Watts at maximum load
Alarm Relays	3 normally closed Maximum load: 3A @ 250Vac, 2A @ 24Vdc, 24 Vac.
Screen	Backlit monochromatic graphic LCD B/N 128 x 64 pixel
5 x 20 mm glass fuse	115 or 230 Vac 1 x 1 A 24 Vac or 24 Vdc 1 x 3 A
Operating temperature	-10 °C - 55 °C
Storage temperature	-20 °C - 60 °C
Environmental humidity	0 ÷ 95% Relative non condensing
Valves opening impulse time	50 m.sec. ÷ 10 sec.
Interval pause time between valves opening	1 sec. ÷ 7200 sec.
Casing	Base in ABS Lid in Polycarbonate
Protection rating from water and dust	IP65 DIN EN 60529
Shock resistance	IK07 2 Joule (EN62262)

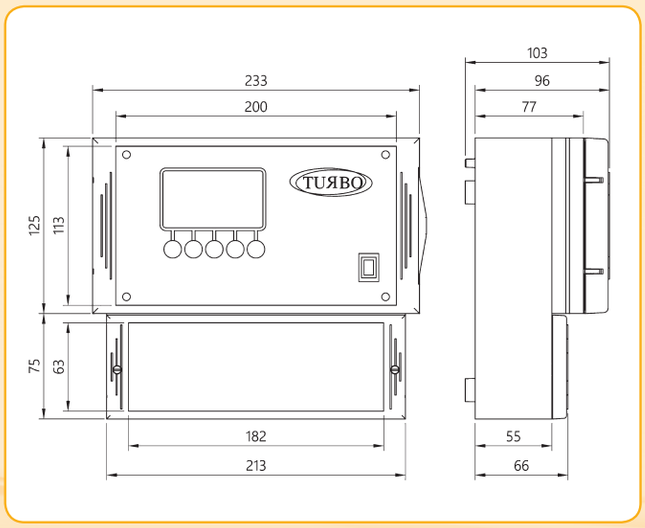

Phone: 01256 477466
Email: Sales@turbocontrols.co.uk
www.turbocontrols.co.uk

Cat_Turbo_2018_Sistemi_EN.indd 124 16/01/19 12:24

E8T CONTROL UNIT ECONOMISER 4÷16 OUTPUT CHANNELS

DESCRIPTION

Economiser for controlling the pneumatic cleaning of industrial dust collector systems. It has 3 output relay contacts and 2 digital input contacts.
Differential pressure digital control through internal transducer, which allows the accurate analysis of the filter clogging status.
Luminous LCD screen, which allows to read the following at all times

- the operating status of the unit
- the filter clogging status dP value
- the solenoid valves active and any alarms
- time until the command of the next air jet
- the emission value

Interface menu available in five languages.

OPTIONS UPON REQUEST

- Activation of 2 solenoid valves for every output channel.
- Analogue electrical tribo sensor management
- Cable glands for power supply input and output of solenoid valves drive cables.
- Connector from wired panel for connection to Matrix cabling.
- Zone 22 ATEX Certification.

REFERENCE STANDARDS

- Directive 2014/30/EC Electromagnetic Compatibility meeting European harmonised standards EN61000-6-2:2005 class B in standard EN61000-6-4:2001
- Directive 2014/35/EU Low Voltage meeting European harmonised standards EN 60947-1:2004

Phone: 01256 477466
Email: Sales@turbocontrols.co.uk
www.turbocontrols.co.uk

TECHNICAL SPECIFICATIONS	
Power supply voltage	115 Vac 50-60 Hz ± 10 % 230 Vac 50-60 Hz ± 10 %
Power supply voltage Alternative upon request	24 Vac ± 10 % 24 Vdc ± 10 %
Output voltage for solenoid valves	115 Vac 50-60 Hz 230 Vac 50-60 Hz 24 Vac 24 Vdc
Inputs	from 4 to 20mA x 1
Outputs proportionate to dP value for remote pressure reading	from 4 to 20mA x 1
Solenoid valves output channels	01 ÷ 16
Electric consumption	28 Watts at maximum load
Alarm Relays	3 normally closed Maximum load: 3A @ 250Vac, 2A @ 24Vdc, 24 Vac.
Screen	Backlit monochromatic graphic LCD B/N 128 x 64 pixel
5 x 20 mm glass fuse	115 or 230 Vac 1 x 1 A 24 Vac or 24 Vdc 1 x 3 A
Operating temperature	-10 °C - 55 °C
Storage temperature	-20 °C - 60 °C
Environmental humidity	0 ÷ 95% Relative non condensing
Valves opening impulse time	50 m.sec. ÷ 10 sec.
Interval pause time between valves opening	1 sec. ÷ 7200 sec.
Measurable pressure	0 - 10 kPa
Casing	Base in ABS Lid in Polycarbonate
Protection rating from water and dust	IP65 DIN EN 60529
Shock resistance	IK07 2 Joule (EN62262)

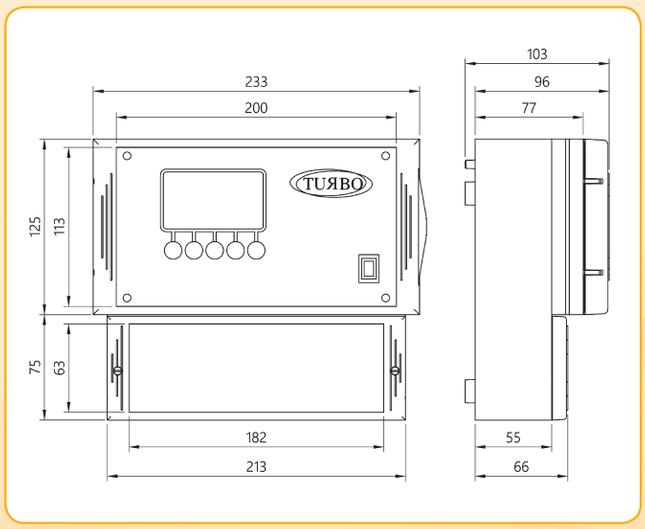

MODBUS RTU MASTER + SLAVE SERIAL SYSTEM - ELECTRIC

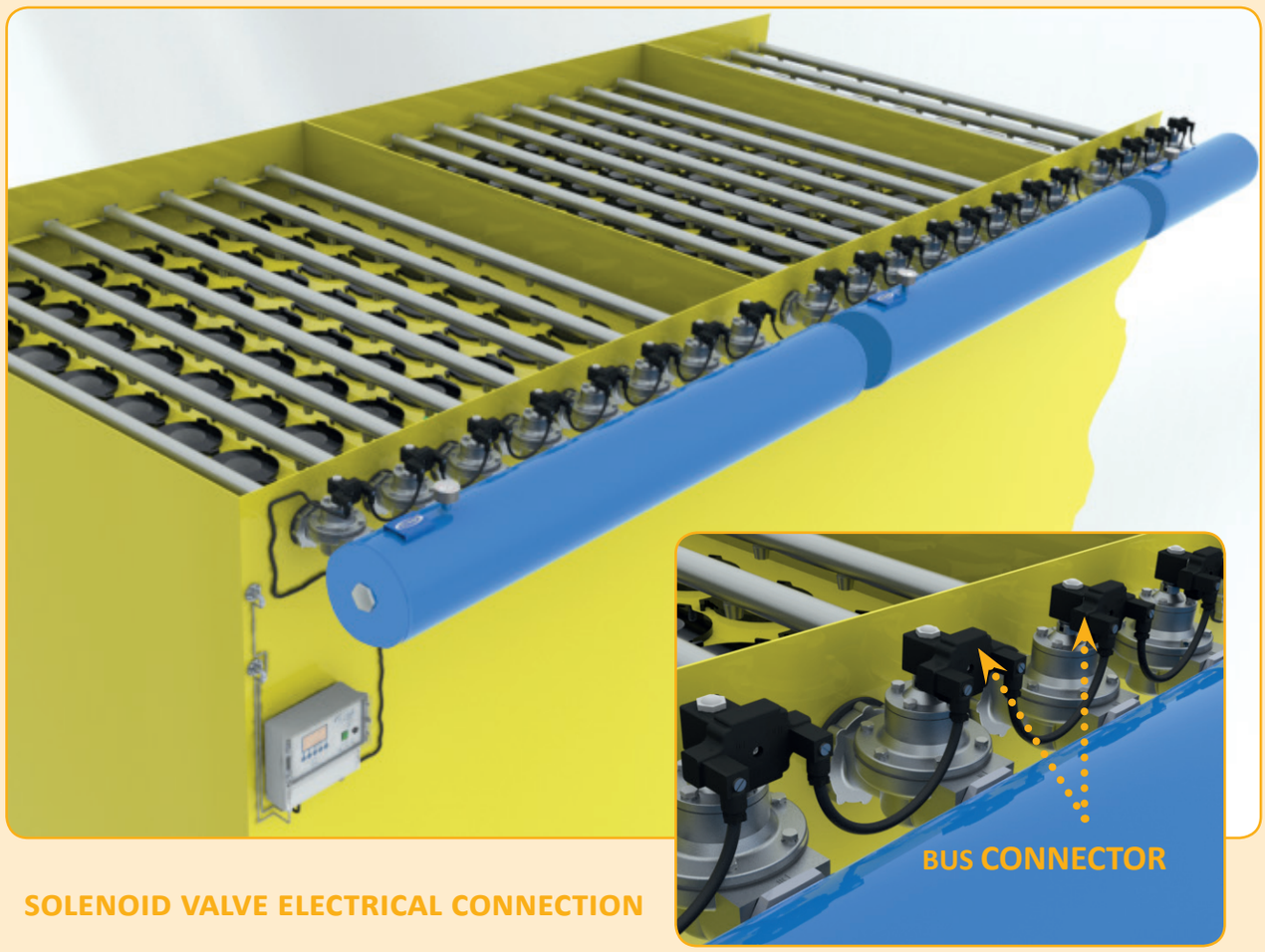

SOLENOID VALVE ELECTRICAL CONNECTION

ECONET MASTER ECONOMISER

BEGA

The ECONET control unit PLUS version can be connected to the BEGA touch screen module.
Installed in the general control panel of the system, it can display/modify all the parameters of the ECONET control unit remotely.
Moreover, it is provided with Wi-Fi and Ethernet port and can be controlled from a PC through a Turbo application.

Cat_Turbo_2018_Sistemi_EN.indd 126 16/01/19 12:24

MODBUS RTU MASTER + SLAVE SERIAL SYSTEM - PNEUMATIC

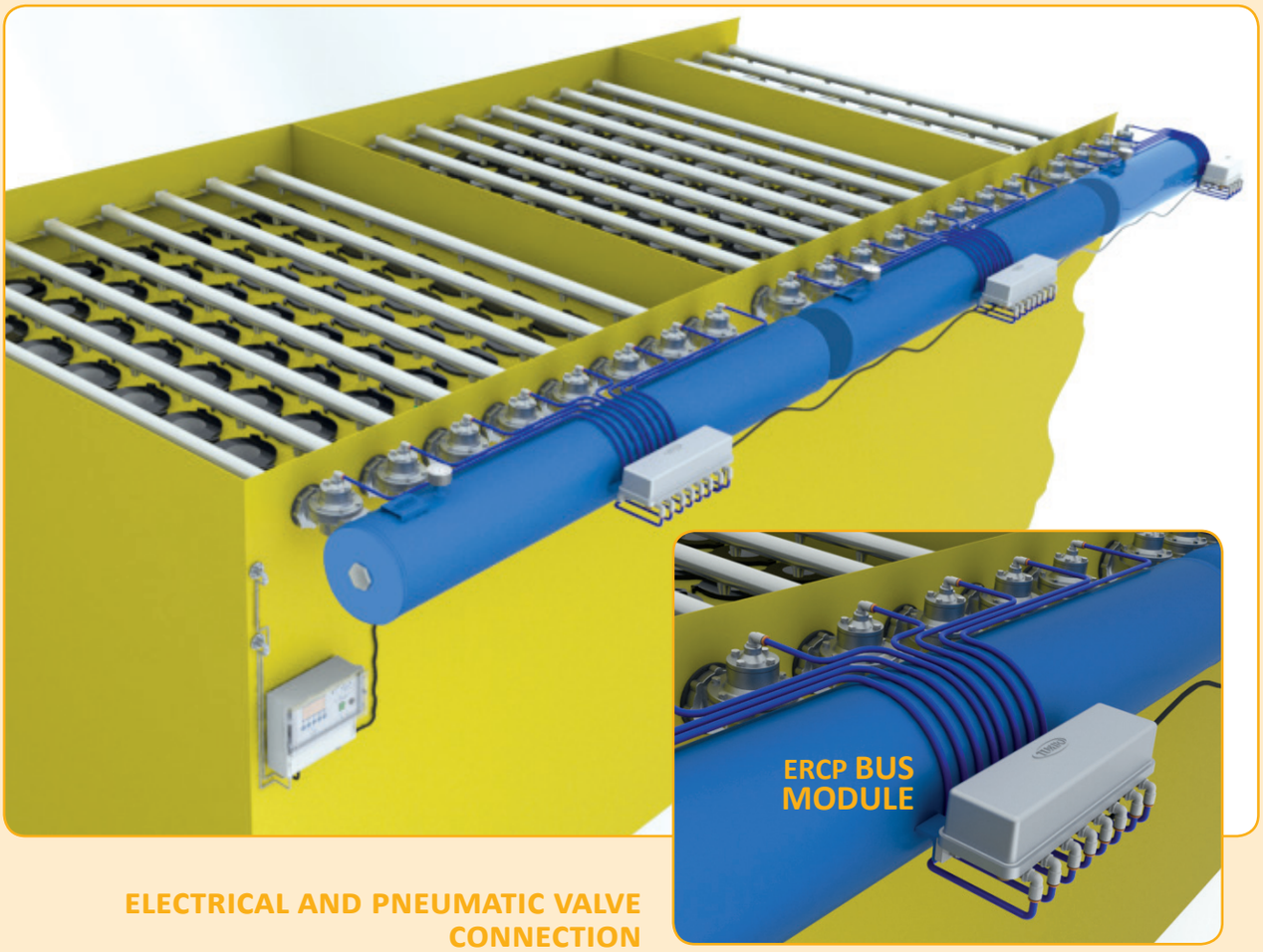

ELECTRICAL AND PNEUMATIC VALVE CONNECTION

ECONET MASTER ECONOMISER

BEGA

The ECONET control unit PLUS version can be connected to the BEGA touch screen module.
Installed in the general control panel of the system, it can display/modify all the parameters of the ECONET control unit remotely.
Moreover, it is provided with Wi-Fi and Ethernet port and can be controlled from a PC through a Turbo application.

Cat_Turbo_2018_Sistemi_EN.indd 127 16/01/19 12:24

ECONET CONTROL UNIT ECONOMISER

128 SOLENOID VALVES

DESCRIPTION

Economiser for commanding pneumatic cleaning of the industrial dust collector plants, with serial control of up to 128 solenoid valves. It has 2 output relay contacts and 4 digital input contacts.
Differential pressure digital control through internal transducer, which allows the accurate analysis of the filter clogging status.
Luminous LCD screen, which allows to read the following at all times

- the operating status of the unit
- the filter clogging status dP value
- the solenoid valves active and any alarms
- time until the command of the next air jet
- the emission value

Interface menu available in five languages.

OPTIONS UPON REQUEST

- Cable glands for power supply input and output of solenoid valves drive cables.
- Zone 22 ATEX Certification.

REFERENCE STANDARDS

- Directive 2014/30/EC Electromagnetic Compatibility meeting European harmonised standards EN61000-6-2:2005 class B in standard EN61000-6-4:2001
- Directive 2014/35/EU Low Voltage meeting European harmonised standards EN 60947-1:2004

TECHNICAL SPECIFICATIONS	
Power supply voltage with automatic switch	115 Vac 50-60 Hz ± 10 % 230 Vac 50-60 Hz ± 10 %
Power supply voltage upon request	24 Vac ± 10 % 24 Vdc ± 10 %
Output voltage for solenoid valves	24 Vdc
Inputs	from 4 to 20mA x 1
Outputs proportional to the dP value for remote pressure reading	from 4 to 20mA x 1
Solenoid valves output channels	01 ÷ 128 digital bus
Electric consumption	28 Watts at maximum load
Alarm Relays	2 normally closed Maximum load: 3A @ 250Vac, 2A @ 24Vdc, 24 Vac.
Screen	Backlit monochromatic graphic LCD B/N 128 x 64 pixel
5 x 20 mm glass fuse	115 or 230 Vac 1 x 1 A 24 Vac or 24 Vdc 1 x 3 A
Operating temperature	-10 °C - 55 °C
Storage temperature	-20 °C - 60 °C
Environmental humidity	0 ÷ 95% Relative non condensing
Valves opening impulse time	50 m.sec. ÷ 10 sec.
Interval pause time between valves opening	1 sec. ÷ 7200 sec.
Measurable pressure	0 - 10 kPa
Casing	Base in ABS Lid in Polycarbonate
Protection rating from water and dust	IP65 DIN EN 60529
Shock resistance	IK07 2 Joule (EN62262)

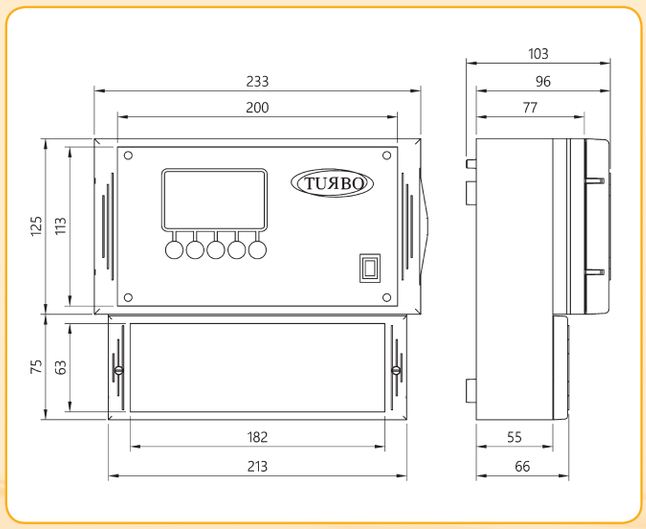

Phone: 01256 477466
Email: Sales@turbocontrols.co.uk
www.turbocontrols.co.uk

Cat_Turbo_2018_Sistemi_EN.indd 128 16/01/19 12:24

ECONET PLUS EC+PLS CONTROL UNIT ECONOMISER
128 SOLENOID VALVES - BUS RS485

DESCRIPTION

Economiser for commanding pneumatic cleaning of the industrial dust collector plants, with serial control of up to 128 solenoid valves. It has 2 output relay contacts and 2 digital input contacts.
Differential pressure digital control through internal transducer, which allows the accurate analysis of the filter clogging status.
Luminous LCD screen, which allows to read the following at all times

- the operating status of the unit
- the filter clogging status dP value
- the solenoid valves active and any alarms
- the time remaining until the command of the next jet of air
- the emission value

Interface menu available in five languages.

OPTIONS UPON REQUEST

- Cable glands for power supply input and output of solenoid valves drive cables.
- Analogue electrical tribo sensor management.
- Zone 22 ATEX Certification.

REFERENCE STANDARDS

- Directive 2014/30/EC Electromagnetic Compatibility meeting European harmonised standards EN61000-6-2:2005 class B in standard EN61000-6-4:2001
- Directive 2014/35/EU Low Voltage meeting European harmonised standards EN 60947-1:2004

TECHNICAL SPECIFICATIONS	
Power supply voltage with automatic switch	115 Vac 50-60 Hz ± 10 % 230 Vac 50-60 Hz ± 10 %
Power supply voltage upon request	24 Vac ± 10 % 24 Vdc ± 10 %
Output voltage for solenoid valves	24 Vdc
Inputs	from 4 to 20mA x 1
Outputs proportional to the dP value for remote pressure reading	from 4 to 20mA x 1
Solenoid valves output channels	01 ÷ 128 digital bus
Electric consumption	28 Watts at maximum load
Alarm Relays	2 normally closed Maximum load: 3A @ 250Vac, 2A @ 24Vdc, 24 Vac.
Serial transmission interfaces of the 485 type with Modbus RTU protocol	1
Output from digital Mosfet for an external relay with coil up to 24 Vdc	1
Screen	Backlit monochromatic graphic LCD B/N 128 x 64 pixel
5 x 20 mm glass fuse	115 or 230 Vac 1 x 1 A 24 Vac or 24 Vdc 1 x 3 A
Operating temperature	-10 °C - 55 °C
Storage temperature	-20 °C - 60 °C
Environmental humidity	0 ÷ 95% Relative non condensing
Valves opening impulse time	50 m.sec. ÷ 10 sec.
Interval pause time between valves opening	1 sec. ÷ 7200 sec.
Measurable pressure	0 - 10 kPa
Casing	Base in ABS Lid in Polycarbonate
Protection rating from water and dust	IP65 DIN EN 60529
Shock resistance	IK07 2 Joule (EN62262)

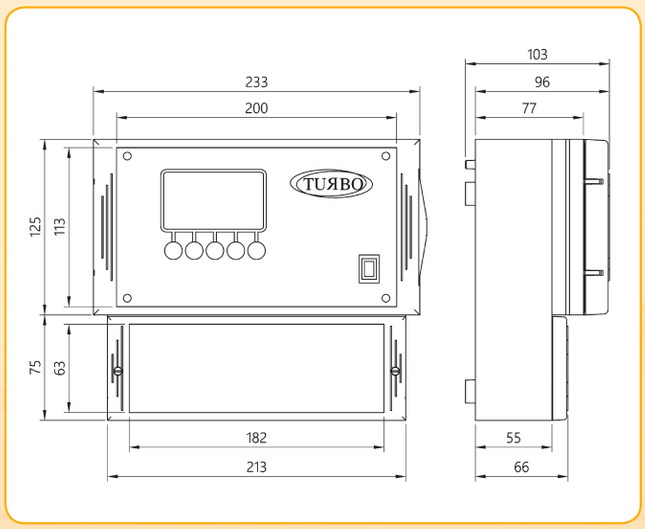

Phone: 01256 477466
Email: Sales@turbocontrols.co.uk
www.turbocontrols.co.uk

Cat_Turbo_2018_Sistemi_EN.indd 129 16/01/19 12:24

ECONET PLUS EC++LS CONTROL UNIT ECONOMISER
128 SOLENOID VALVES RS485 BUS MODBUS RTU PROTOCOL TCP/IP

DESCRIPTION

Economiser for commanding pneumatic cleaning of the industrial dust collector plants, with serial control of up to 128 solenoid valves. In the version with metal container and enhanced power supply unit, the serial control of up to 250 solenoid valves is possible. It has 2 output relay contacts and 4 digital input contacts. Differential pressure digital control through internal transducer, which allows the accurate analysis of the filter clogging status. Luminous LCD screen, which allows to read the following at all times

- the operating status of the unit
- the filter clogging status dP value
- the solenoid valves active and any alarms
- time until the command of the next air jet
- the emission value

Interface menu available in five languages.

OPTIONS UPON REQUEST

- Ethernet communication network board.
- Wi-Fi communication network board.
- Cable glands for power supply input and output of solenoid valves drive cables.
- Analogue and digital electrical tribo sensor management.
- Zone 22 ATEX Certification.

REFERENCE STANDARDS

- Directive 2014/30/EC Electromagnetic Compatibility meeting European harmonised standards EN61000-6-2:2005 class B in standard EN61000-6-4:2001
- Directive 2014/35/EU Low Voltage meeting European harmonised standards EN 60947-1:2004

Phone: 01256 477466
Email: Sales@turbocontrols.co.uk
www.turbocontrols.co.uk

TECHNICAL SPECIFICATIONS	
Power supply voltage with automatic switch	115 Vac 50-60 Hz ± 10 % 230 Vac 50-60 Hz ± 10 %
Power supply voltage upon request	24 Vac ± 10 % 24 Vdc ± 10 %
Output voltage for solenoid valves	24 Vdc
Inputs	from 4 to 20mA x 1
Outputs proportional to the dP value for remote pressure reading	from 4 to 20mA x 1
Solenoid valves output channels	01 ÷ 128 digital bus
Electric consumption	28 Watts at maximum load
Alarm Relays	2 normally closed Maximum load: 3A @ 250Vac, 2A @ 24Vdc, 24 Vac.
Serial transmission interfaces of the 485 type with Modbus RTU protocol	1
Output from digital Mosfet for an external relay with coil up to 24 Vdc	1
RS485 interface for Tribo Sensor	1
Screen	Backlit monochromatic graphic LCD B/N 128 x 64 pixel
5 x 20 mm glass fuse	115 or 230 Vac 1 x 1 A 24 Vac or 24 Vdc 1 x 3 A
Operating temperature	-10 °C - 55 °C
Storage temperature	-20 °C - 60 °C
Environmental humidity	0 ÷ 95% Relative non condensing
Valves opening impulse time	50 m.sec. ÷ 10 sec.
Interval pause time between valves opening	1 sec. ÷ 7200 sec.
Measurable pressure	0 - 10 kPa
Casing	Base in ABS Lid in Polycarbonate
Protection rating from water and dust	IP65 DIN EN 60529
Shock resistance	IK07 2 Joule (EN62262)

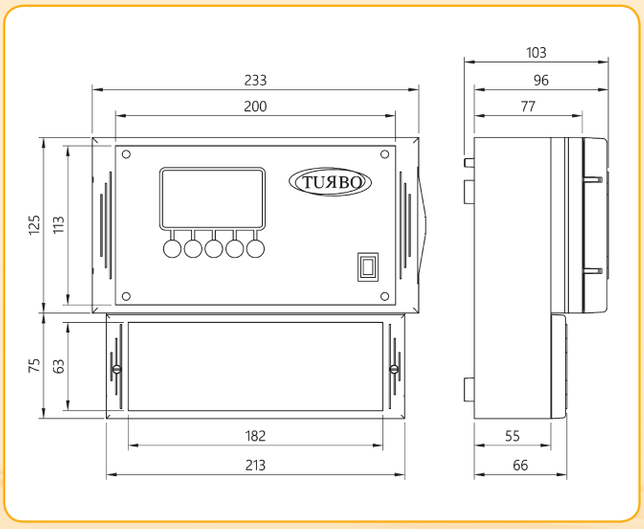

Cat_Turbo_2018_Sistemi_EN.indd 130 16/01/19 12:24

COMPUTER WITH LCD MONITOR, WI-FI - BEGA

DESCRIPTION

BEGA220A is a computer with a 7” touch screen monitor with 18-bit colour depth.
Possible Wi-Fi connection, Ethernet LAN 10/100 Mbps, audio, Host USB 1.1 x1.
Its features allows it to manage and read parameters from the Econet control unit through a built-in application.

TECHNICAL DATA	
CPU	Samsung S3C2416X 400 MHz
	Architecture 32-bit RISC CPU ARM926EJ
System memory	16 bit 64MB / 133Mhz DDR2
Fixed hard disk	2 GB
Serial ports	3xRS-232, 1xRS485/422
USB	1xUSB2.0, 1xUSB1.1
LAN	16-bit 10/100 Mbps Controller Ethernet
Wi-Fi	IEEE 802.11b/g
LCD size	7”
LCD resolution	800x480
Power supply	DC 9V-28V
Operating temperature	-20°C/+70°C

MAIN TECHNICAL FEATURES
ARM 9 CPU
7" 800x400 colour touch screen with 18-bit colour depth
Wi-Fi
10/100Mbps Ethernet LAN
RS-232/485/422
USB1.1x1 host
USB2.0x1 device
SD/MMC Card
WINCE 5.0 OS support
Net Compact Framework 3.5 support

ECONET PANELPC AND TRIBO PANEL PC

ECONET PANEL PC can be interfaced with Master EC+ EC++ control unit

Software for Windows OS with licence for individual PC.
MODBUS RTU communication protocol, PC/Master connection with USB-RS485 converter, supplied.
TCP/IP communication protocol for versions with Master control unit equipped with Wi-Fi and/or Ethernet port.
Pendrive supplied with instructions and utility for installation in the company Network.
Main features:

- allows remote display and modification of all control unit setting parameters.
- Real time indication of filter clogging with 4 units of measurement.
- Displays and stores alarms on PC
- Exports data into Excel and stores the data directly onto the Hard Disk of the PC
- Possibility of displaying more Master control units of the same plant, assigning a different address to each and connecting the same in series with termination of the last in the chain.
- Software in 5 Languages
- Customisable user password
- Solenoid valves 1-6 multi-activation sequence compilation.
- Customisable company Logo and info

TRIBO PANEL PC can be interfaced with triboelectric sensor control unit

Software for Windows OS with licence for individual PC.
MODBUS RTU communication protocol, PC/control unit connection with USB-RS485 converter, supplied.
Main features:

- allows remote display and modification of all control unit setting parameters.
- Real time display of dust emissions in mg/m3
- Display and storing of alarms: peak (broken sleeve)/pre-alarm/alarm
- Continuous recording of dust emission and storage of the data directly on Hard Disk of the PC (Excel data reading)
- Software in 5 Languages
- Customisable user password
- Customisable company Logo and info

Cat_Turbo_2018_Sistemi_EN.indd 132 16/01/19 12:24

ECONET CONNECTOR WITH BUILT-IN ACTIVATION BOARD

DESCRIPTION

Connector with built-in board for wiring the connection and for activation of the dust collection valves in the plants managed by the Econet, Econet Plus EC+PLS, Econet Plus EC++LS. serial system.

TECHNICAL FEATURES

- Communication with Econet control unit via Serial Bus.
- Self-addressing connectors, which are interchangeable with each other, are associated with the valve where they are mounted.
- Connector filled with encapsulating resin.
- Maximum distance from the Econet control unit to the first valve of the of the chain 50 metres.
- CE Certification

OPTIONS UPON REQUEST

- Zone 22 ATEX Certification.

REFERENCE STANDARDS

- Directive 2014/30/EC Electromagnetic Compatibility meeting European harmonised standards EN61000-6-2:2005 class B in standard EN61000-6-4:2001
- Directive 2014/35/EU Low Voltage meeting European harmonised standards EN 60947-1:2004

Phone: 01256 477466
Email: Sales@turbocontrols.co.uk
www.turbocontrols.co.uk

TECHNICAL SPECIFICATIONS	
Power supply voltage	24 Vdc 12 Watt
Electric consumption	0.25 Watt
Connection to the coil	3 Poles 2 + Gnd Distance between the Contacts 18 mm. EN 175301-803 - DIN43650
Connection between connectors	3 Poles 2 + Gnd Distance between the Contacts 8 mm. EN 175301-803 - DIN43650
Operating temperature	-10 °C - 55 °C
Storage temperature	-20 °C - 60 °C
Casing	Polycarbonate
Protection rating from water and dust	IP65 DIN EN 60529

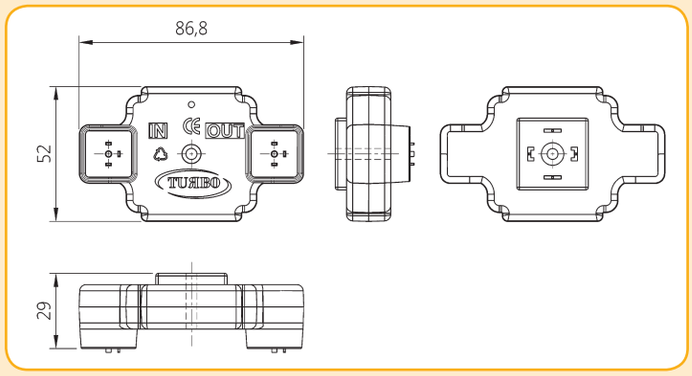

CONNECTION TO THE VALVES WITH PILOT

Connect the power supply wiring of the solenoid valves of the connector of the control board terminal board, to the first solenoid valve in input indicated with IN:

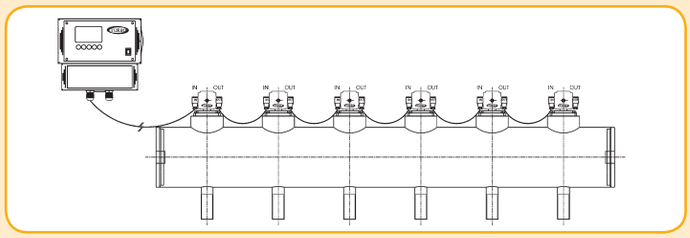

Connect the other solenoid valves in sequence using the connecting cables with PG7 connectors, respecting the IN -> OUT polarity; mount the gaskets to guarantee the IP sealing of the circuit.
The connector of the last solenoid valve marked OUT cannot be used. It must be closed with a PG7 connector, by removing the cylindrical rubber cap supplied as protection for transport only.

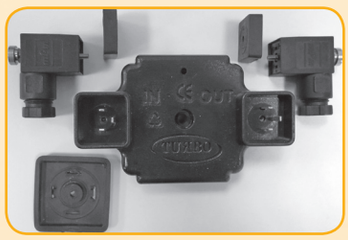

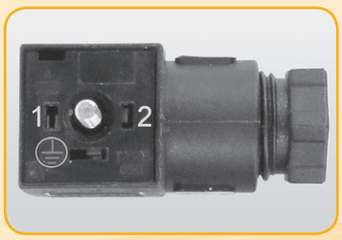

The wires of the connection cable must be connected o the polarised connectors in the following positions:

- 1 + power supply brown wire
- 2 activation signal white wire
- 3 green power supply wire central position with earth symbol

The cable used for wiring is the H05VV-F 0.72mm² - 19Awg type

Cat_Turbo_2018_Sistemi_EN.indd 133 16/01/19 12:24

ERCP - REMOTE PILOT ENCLOSURE FOR ECONET SYSTEM

DESCRIPTION

Pilot enclosure for the remote control of diaphragm valves interfaced with Econet system only.

FEATURES	
Fluids	Non-lubricated filtered air
Operating pressure	between 0.5 and 7.5 bar
Operating temperature	-20°C; +80°C
Cover and base:	Die-cast aluminium
Pilot	Stainless steel
Pilot core	Stainless steel
Screws and bolts	Stainless steel
Coil insulation	Class H
Protection	IP66
Standard voltage	24VDC (12W)

CONNECTION TO THE PILOT ENCLOSURES FOR VALVES

Connect the power supply wiring of the solenoid valves pilots from the connector of the control board terminal board, to the first ERCP enclosure with pilots for driving the pneumatic valves, in input indicated with IN.
Connect the ERCP enclosures in sequence using the connecting cables with the DIN 43650 connectors, to be fixed to the cylindrical mounting plates.
Respecting the IN -> OUT polarity, mount the gaskets to manage the IP sealing of the circuit.

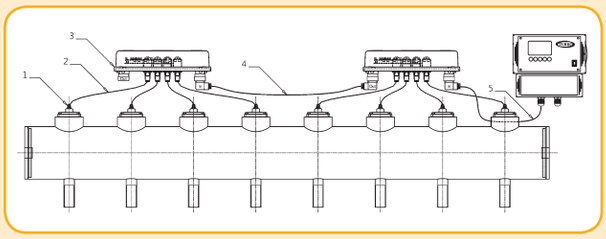

1	Remote pneumatic valve
2	Connection pipe between remote pilot and the valve
3	Enclosure with built-in pilots for driving valves
4	Connection cabling between the ERCP enclosures
5	Control unit connection cabling to the enclosure

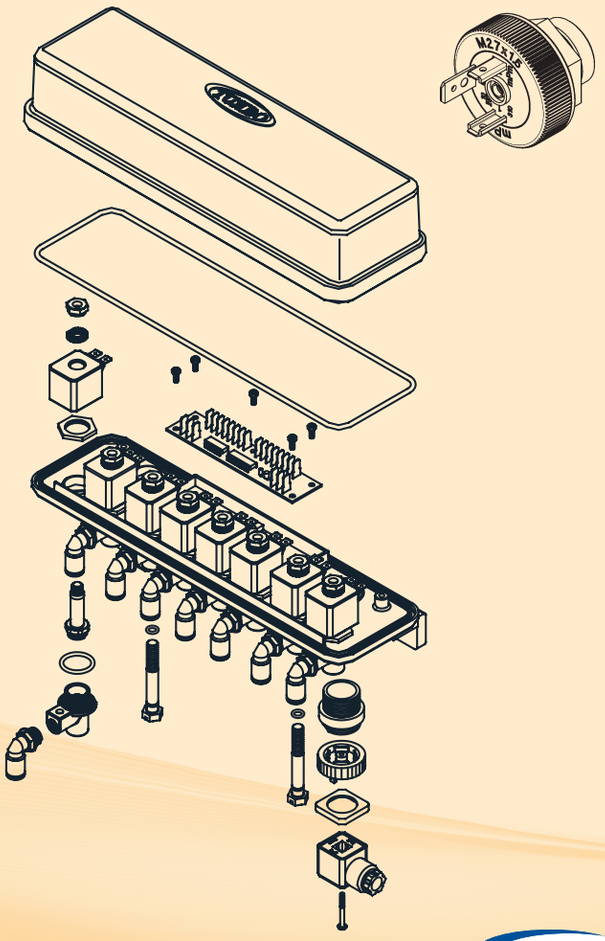

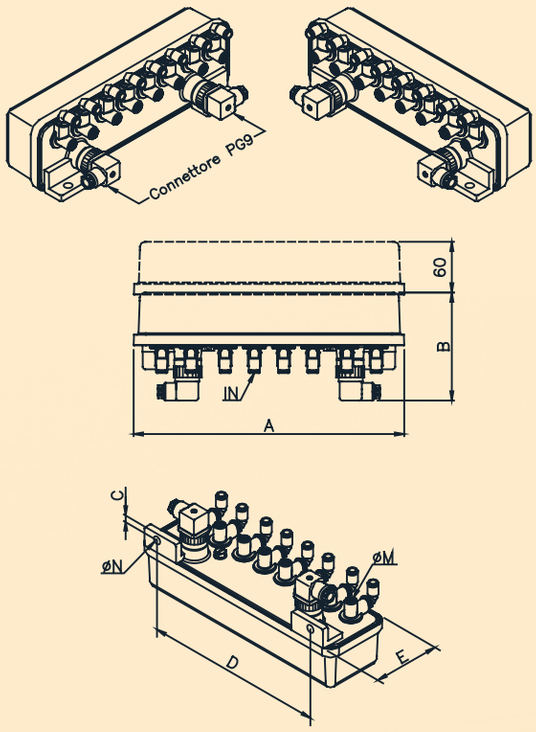

MODEL	A	B	C	D	E	øM	øN	Weight (kg)
ERCP8	333	136.5	10	267	100	1/8"	11	3.3

Cat_Turbo_2018_Sistemi_EN.indd 134 16/01/19 12:24

E4T SEQUENCER IN RCP ENCLOSURE

Enclosure for the remote pneumatic activation of pulse valves for dust collector plants, via electro-pilots with direct solenoid activation.

The pilots protected inside the enclosure are isolated from the environment, away from dust, humidity, weather, accidental blows. Up to 8 pilot units (minimum 1) can be housed in each enclosure.

The E4T sequencer board functions at 24 Vdc. The accessory power supply board with transformer is mounted In the RCP enclosures at 115 and 230 Vac.

FEATURES	
Enclosure Support Base	Die-cast Aluminium
Enclosure Lid	Die-cast Aluminium
Pilot Core	Stainless Steel
Screws	Stainless Steel
Protection rating from water and dust	IP66 (EN60529)
Operating Pressure	0.5 Bar to 7.5 Bar Maximum
Operating Temperature	- 20 °C + 80 °C
Environmental Humidity	0 ÷ 95% Relative non condensing
Power Supply Voltage	24 Vdc 100 Vac 50-60 Hz 240 Vac 50-60 Hz
Electric Consumption	18 Watts at Maximum Load
Coil Power Supply Voltage	24 Vdc 12 Watt
Coil Insulation	Class H
Maximum Piloting Distance	≤ 3 Metres guaranteed with Turbo s.r.l. valves
Weight of the version with 2 Pilots	2.15 Kg
Total Weight with 8 Pilots	3.3 Kg

RCP

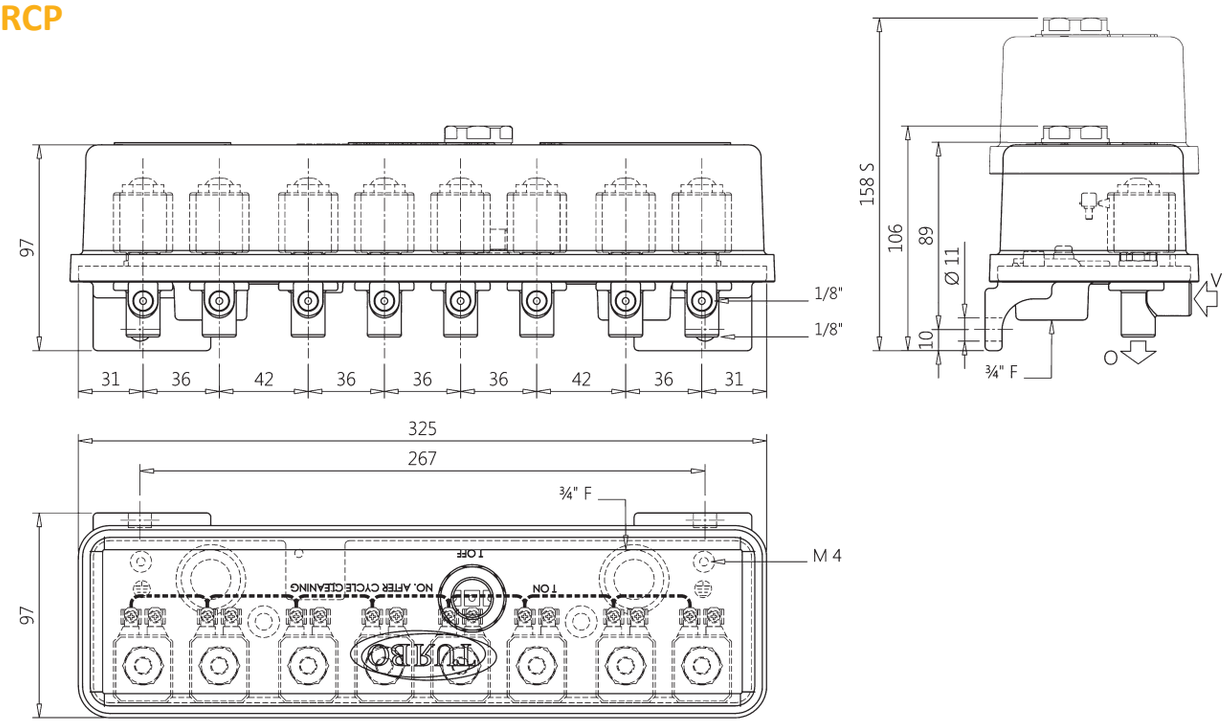

E9TRB TRIBO SENSOR WITH CHARGE DISPLACEMENT

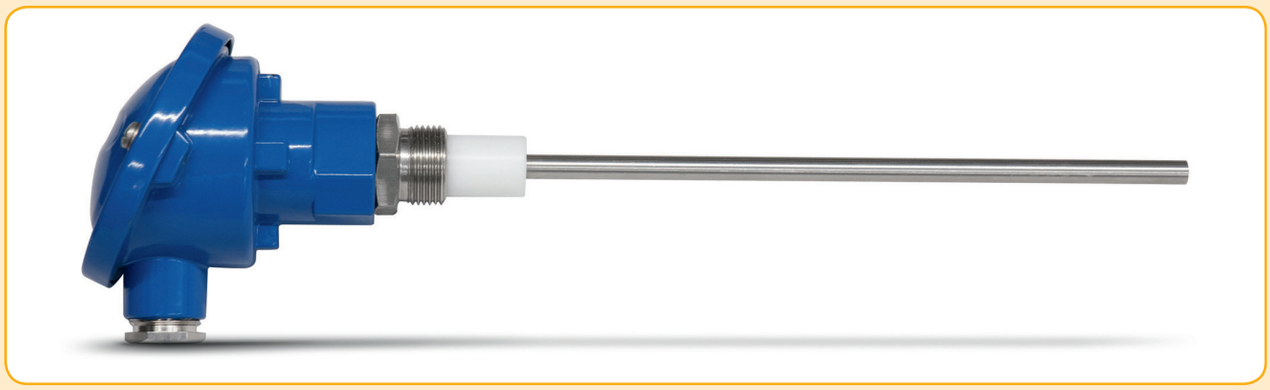

DESCRIPTION

The charge displacement probe is a measuring instrument with microprocessor, is pre-calibrated, with two open-collector type optically-isolated digital outputs, an Rs485 serial line to configure and/or download data, a PWM 4/20 mA output and brief LED indications for the operating modes. The probe is designed to detect and measure the dust emissions caused by breakage of sleeve filters.
The probe detects the dust in a gaseous fluid, with displacement of the electric charge in the electrode, induced by the electric charges. The quantity of electric charge induced on the electrode is proportional to the amount of dust present in the gaseous fluid. An increase in the concentration of the dusts determines a proportional increase of the signal that reaches the micro-processor.

3201058 Threaded Bush F. 3/4"G L040 Max. T. +60°C
3201060 Threaded Bush F. 3/4"G L100 Max. T. +120°C
3201062 Threaded Bush F. 3/4"G L150 Max. T. +180°C

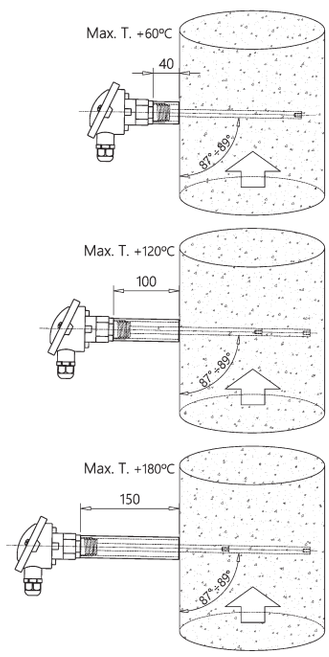

TECHNICAL SPECIFICATIONS

Power supply	20 / 30 Vdc
Maximum input power	1W
Resolution	0.1 mg/m3, 0.01 mg/m3 See versions
Range settings	Automatic/Manual
Dimensions of the dust particles	> 0.3 µm
Type of products that can be measured	Particles of dust in gaseous fluid
Flow speed	> 4 m/s
Measuring principle	Charge displacement
Alarm threshold 3 (Fault)	Activated automatically by the test function
Alarms outputs	n. 3 optoisolated outputs with solid state relay, protected by self-resetting fuses
Outputs maximum current	100 mA
Maximum voltage applicable on the outputs	48 V
Output functions	Can be set normally closed or normally open
Probe operating temperature	< 180°C
Probe operating pressure	< 2 bar
Electrode material	Aisi 304 stainless steel
Container material	Aluminium
Humidity	< 95% non condensing
Environment temperature for the electronics	-20 / +60 °C For higher temperatures mount with spacer
Measurable elements	All non-aggressive gases
Electric connection	1 terminal board with 3 poles + 1 terminal board with 6 poles
Mechanical connection to the structure	3/4" G
Protection rating	IP 65
Display	n°. 4 LEDs
Output PWM 4/20 mA	Active output, optoisolated. Max load 500 Ohm
Serial output	RS485 with two wires

OPTIONS UPON REQUEST

- Zone 22 ATEX Certification.
- Surface treatment in Teflon PTFE for heavy duty use, direct exposure to weather conditions, acid exhaust fumes.

REFERENCE STANDARDS

- Directive 2014/30/EC Electromagnetic Compatibility meeting European harmonised standards EN61000-6-2:2005 class B in standard EN61000-6-4:2001
- Directive 2014/35/EU Low Voltage meeting European harmonised standards EN 60947-1:2004

Cat_Turbo_2018_Sistemi_EN.indd 136 16/01/19 12:24

E9T CONTROL UNIT FOR E9TRB TRIBO SENSOR

TECHNICAL SPECIFICATIONS	
Power supply voltage	115 Vac 50-60 Hz ± 10 % 230 Vac 50-60 Hz ± 10 %
Power supply voltage upon request	24 Vac ± 10 % 24 Vdc ± 10 %
Electric consumption	3 Watts at maximum load
Outputs proportional to the value of 4 ÷ 20 mA	1
Alarm Relays	3 peak, pre-alarm, alarm
485 type serial transmission interfaces with Modbus RTU protocol	1 per probe connection 1 Per PC – PLC - SV
Display	Backlit monochromatic graphic LCD B/N 128 x 64 pixel
Operating temperature	-10 °C - 55 °C
Storage temperature	-20 °C - 60 °C
Environmental humidity	0 ÷ 95% Relative non condensing
Casing	Base in ABS Lid in Polycarbonate
Protection rating from water and dust	IP65 DIN EN 60529

DESCRIPTION

The charge displacement probe is a measuring instrument with micro-processor, the E9T control unit is used to set, manage and display the signals coming from the electric tribo sensor.

The probe detects the dust in a gaseous fluid, with displacement of the electric charge in the electrode, induced by the electric charges. The quantity of electric charge induced on the electrode is proportional to the amount of dust present in the gaseous fluid.

An increase in the concentration of the dusts determines a proportional increase of the signal that reaches the micro-processor. The signal is interpreted and displayed on the control unit screen.

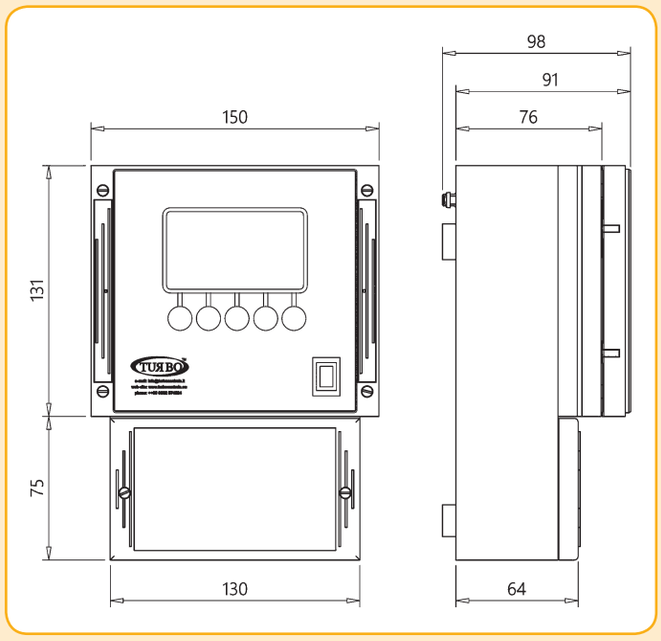

OPTIONS UPON REQUEST

- Cable glands for power supply input.
- Zone 22 ATEX Certification.

REFERENCE STANDARDS

- Directive 2014/30/EC Electromagnetic Compatibility meeting European harmonised standards EN61000-6-2:2005 class B in standard EN61000-6-4:2001
- Directive 2014/35/EU Low Voltage meeting European harmonised standards EN 60947-1:2004

Phone: 01256 477466
Email: Sales@turbocontrols.co.uk
www.turbocontrols.co.uk

TIMED CONNECTOR

4401002 024 VAC VDC - 4401004 115 230 VAC

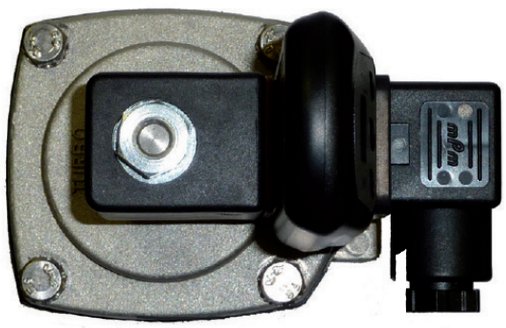

TECHNICAL FEATURES	
Pause	0.1 sec to 99 hours, settable
Activation time	0.1 sec to 99 hours, settable
Manual setting	Yes, micro-switch
Power supply range	024-VAC-VDC 115-230 VAC
Current consumption	7 mA max
Operating temperature	-10°C - +55°C
Protection rating	IP65 NEMA 4
Container material	FR ABS
Type of connection	EN175301-803 (ex DIN 43650A)
Indicators	LED
Standard design	VDE 01 10C

Analogue version of the timer available with
power supply range 024÷240 Vac Vdc with code 4401006

Cat_Turbo_2018_Sistemi_EN.indd 138 16/01/19 12:24

MATRIX ELECTRICAL SYSTEM

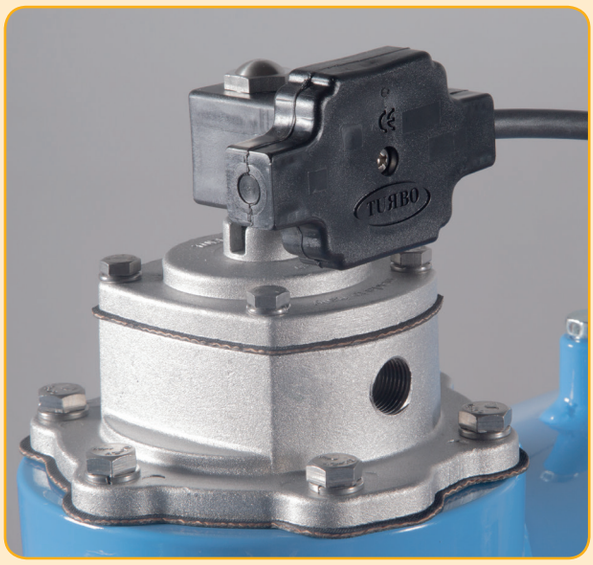

The Matrix electrical System is designed to reduce wiring time and costs. Matrix allows for an easy connection between the electronic control unit and the valves.

TECHNICAL FEATURES

Connectors	Up to 16 for every single cable
Cable diameter	8 mm
Protection rating	IP65
Operating temperature	-20°C / +80°C

CE - UL - CUL CERTIFICATIONS

FEATURES

The Matrix system consists of a multicore cable where all the prewired and printed connectors are connected. These can have different pitches, according to customer requirements.
The terminal cable can be provided either with free cables to be connected to any type of electronic device or with a connector to be connected directly to our device.

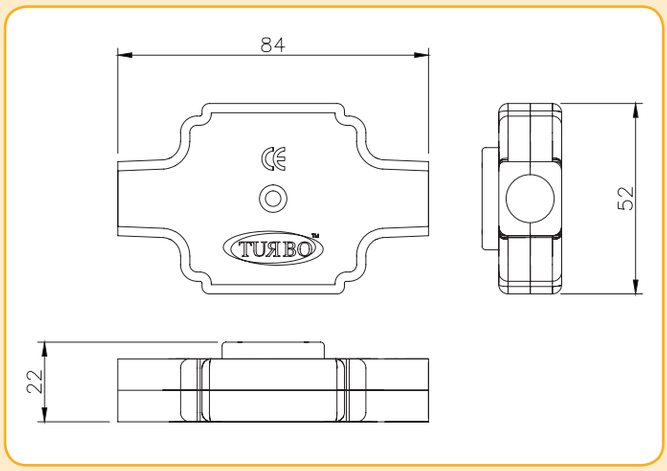

1 2 3 4 5 6 7 8 9 10 11 12 13 14 15

MTX= Matrix system

01-00= number of connectors

P= connector pitch

001-999= fixed connector pitch (mm)
M0000-M9999= custom pitch with reference to drawing No. M...

M= terminal cable

01-99= terminal cable length (m)

P= terminal cable connected to the connector
W= free terminal cable

CONNECTOR SIZE

12 outputs	ØD 34 mm
16 outputs	ØD 44.5 mm

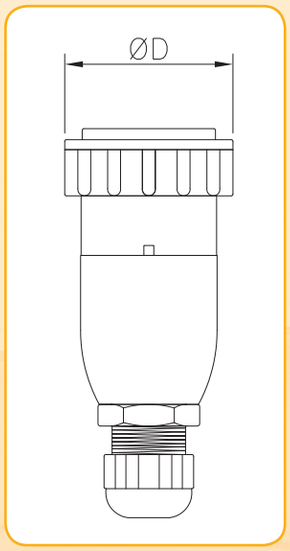

ACCESSORIES

PRESSURE GAUGE

RELIEF VALVE

PILOT UNIT

COIL+CONNECTOR

COIL FOR ENCLOSURES

SILENCER

MANUAL DRAIN VALVE

AUTOMATIC DRAIN VALVE

Cat_Turbo_2018_Sistemi_EN.indd 140 16/01/19 12:24

MULTI-TRIGGER NOZZLE

PLUGS

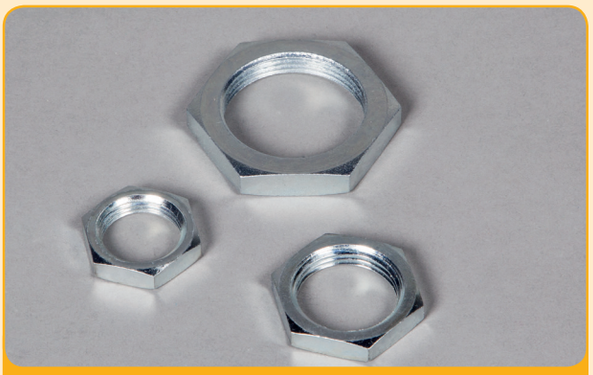

COUNTER NUTS

PRESSURE ADJUSTMENT FILTERS

FILTER PLUG

DIAPHRAGM

Cat_Turbo_2018_Sistemi_EN.indd 141 16/01/19 12:25

TURBO™

Turbo Controls

01256 477466
Sales@turbocontrols.co.uk
www.Turbocontrols.co.uk